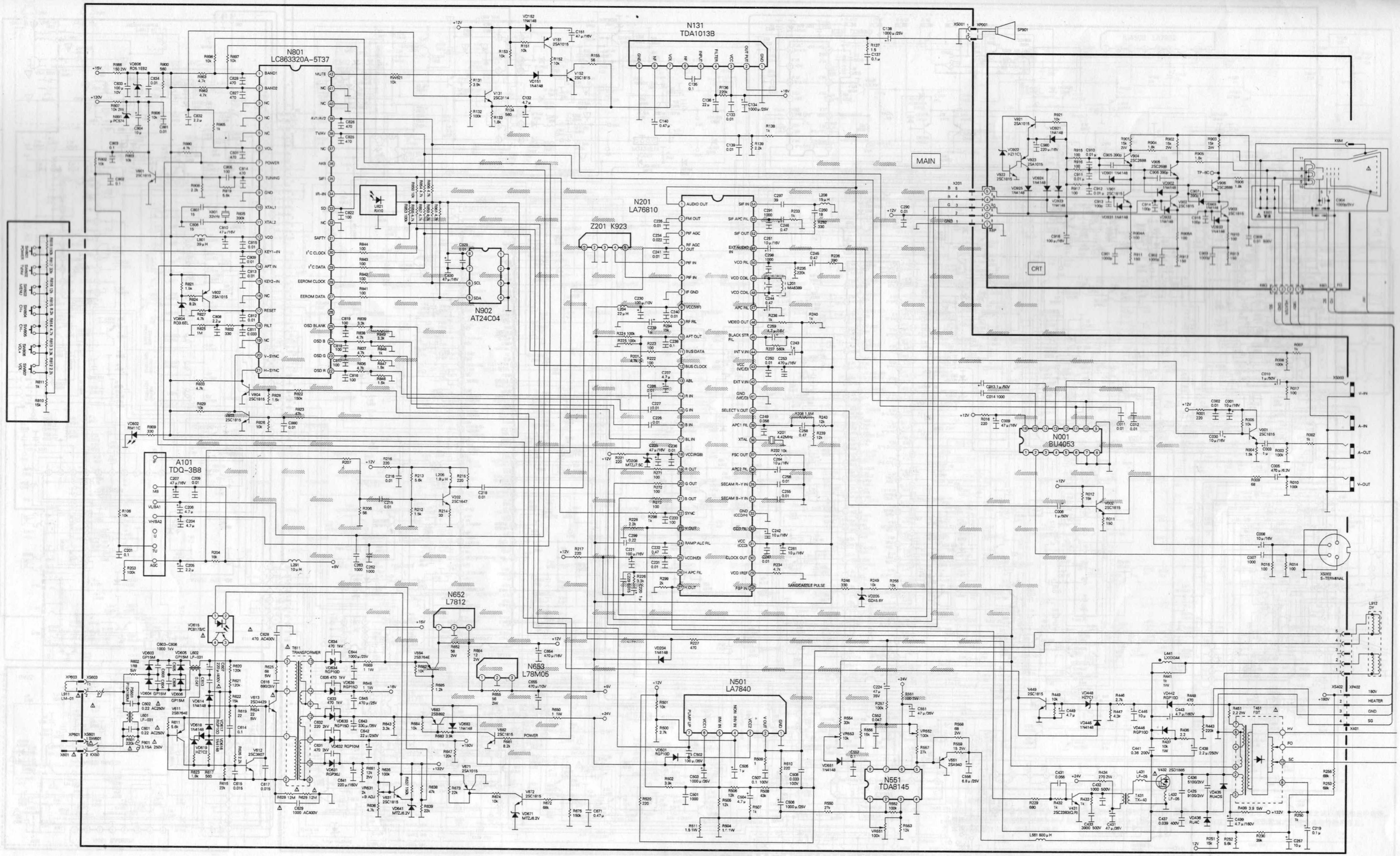
N801
LC863320A-5T37
N131
TDA1013B
N201
LA76810
Z201 K923
N902
AT24C04
A101
TDQ-3B8
N001
BU4053
N652
L7812
N653
L78M05
N501
LA7840
N551
TDA8145
MAIN
CRT
TRANSFORMER
POWER
SANDCASTLE PULSE
V-IN
A-IN
A-OUT
V-OUT
S-TERMINAL
HEATER
GND
SG