SCHEMATIC DIAGRAMS

24HV10XE

PRODUCT NAME '11 ASEAN ANALOG LCD TV

UNIT NAME MAIN MP

PWA NAME

PWB NAME PE1006ZA

展開機種

19HV10XE/32HV10XE

UNIT NO. MAIN

PWA NO.

PWB NO.

PAGE	SH.	FUNCTION	REV	PAGE	SH.	FUNCTION	REV	PAGE	SH.	FUNCTION	REV	PAGE	SH.	FUNCTION	REV
1	001	FRONT PAGE		26				51				76			
2	002	Revision Sheet		27				52				77			
3	100	REALTEK(Analog Video Interface)	00	28				53				78			
4	101	REALTEK(Analog Audio Interface)	00	29				54				79			
5	102	REALTEK (HDMI Interface)	00	30				55				80			
6	103	REALTEK (LVDS Interface)	00	31				56				81			
7	104	REALTEK (Peripheral Interface)	00	32				57				82			
8	105	E2PROM/EXT-RST/DEBUG-CON	00	33				58				83			
9	370	AUDIO D-AMP	00	34				59				84			
10	371	AUDIO D-AMP OUT	00	35				60				85			
11	372	AUDIO MUTE	00	36				61				86			
12	601	EXT1_COMPOSITE	00	37				62				87			
13	602	EXT2_COMPONENT/COMPOSITE	00	38				63				88			
14	650	LVDS_Connector	00	39				64				89			
15	651	BL_Control	00	40				65				90			
16	661	HDMI HPD	00	41				66				91			
17	700	LED/KEY/IR IF	00	42				67				92			
18	702	SIDE KEY IF	00	43				68				93			
19	750	TUNER	00	44				69				94			
20	901	3.3V LDO/1.2V DCDC	00	45				70				95			
21	950	SIGNAL LOW B-B		46				71				96			
22				47				72				97			
23				48				73				98			
24				49				74				99			
25				50				75				100			

APPROVED BY	CHECKED BY	DESIGNED BY	TITLE	TOTAL	PAGE NO.	REV.MARK	DRAWING.NO.
MATSUDA	-	SASAKI	Circuit Diagram	21	1	00	

5T03655-3C

REV. MARK	CONTENTS	APPROVED BY	REVISED BY	REGISTERED
00	'11-05-10 First Release of PE1006	MATSUDA	-	T.SASAKI
01	'11-06-01 Release of PE1006ZA Improvement of supurious and POP sound.	MATSUDA	-	T.SASAKI

REV. MARK	CONTENTS	APPROVED BY	REVISED BY	REGISTERED

DESIGNED BY	TITLE	FUNCTION	SH.NO.	PAGE NO.	REV.MARK	DRAWING.NO.
	Circuit Diagram	REVISION SHEET	002	2	00	

2011.06.24 13:39

TOSHIBA CORPORATION

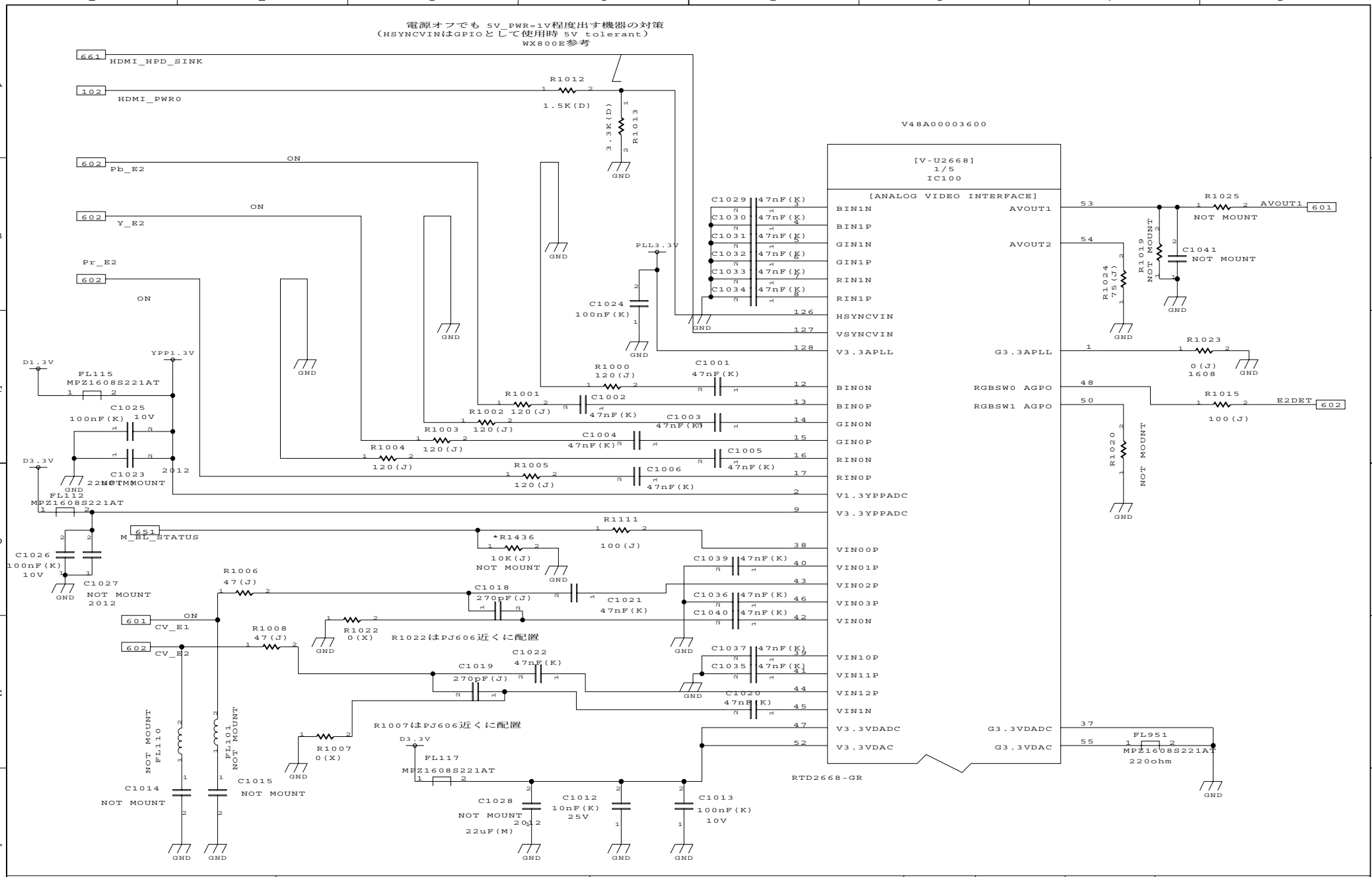

DESIGNED BY	TITLE	FUNCTION	SH.NO.	PAGE NO.	REV.MARK	DRAWING.NO.
KAWAMOTO	ASEAN H-1 PJ	VIDEO Interface	100	1	00	

2011.06.24 13:39

TOSHIBA CORPORATION

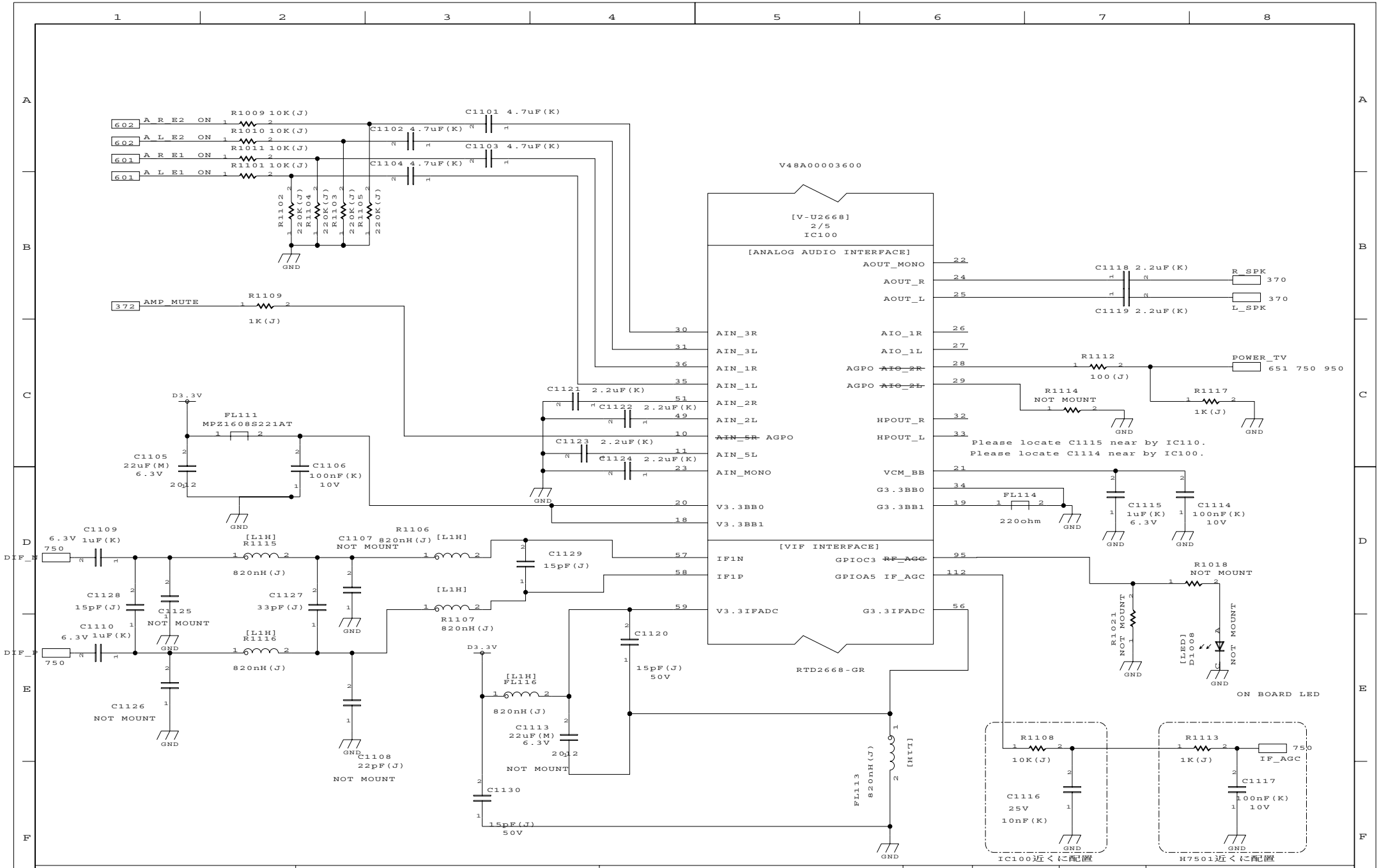

DESIGNED BY	TITLE	FUNCTION	SH.NO.	PAGE NO.	REV.MARK	DRAWING.NO.
MORISHITA	ASEAN H-1 PJ	AUDIO Interface	101	2	00	

2011.06.24 13:39

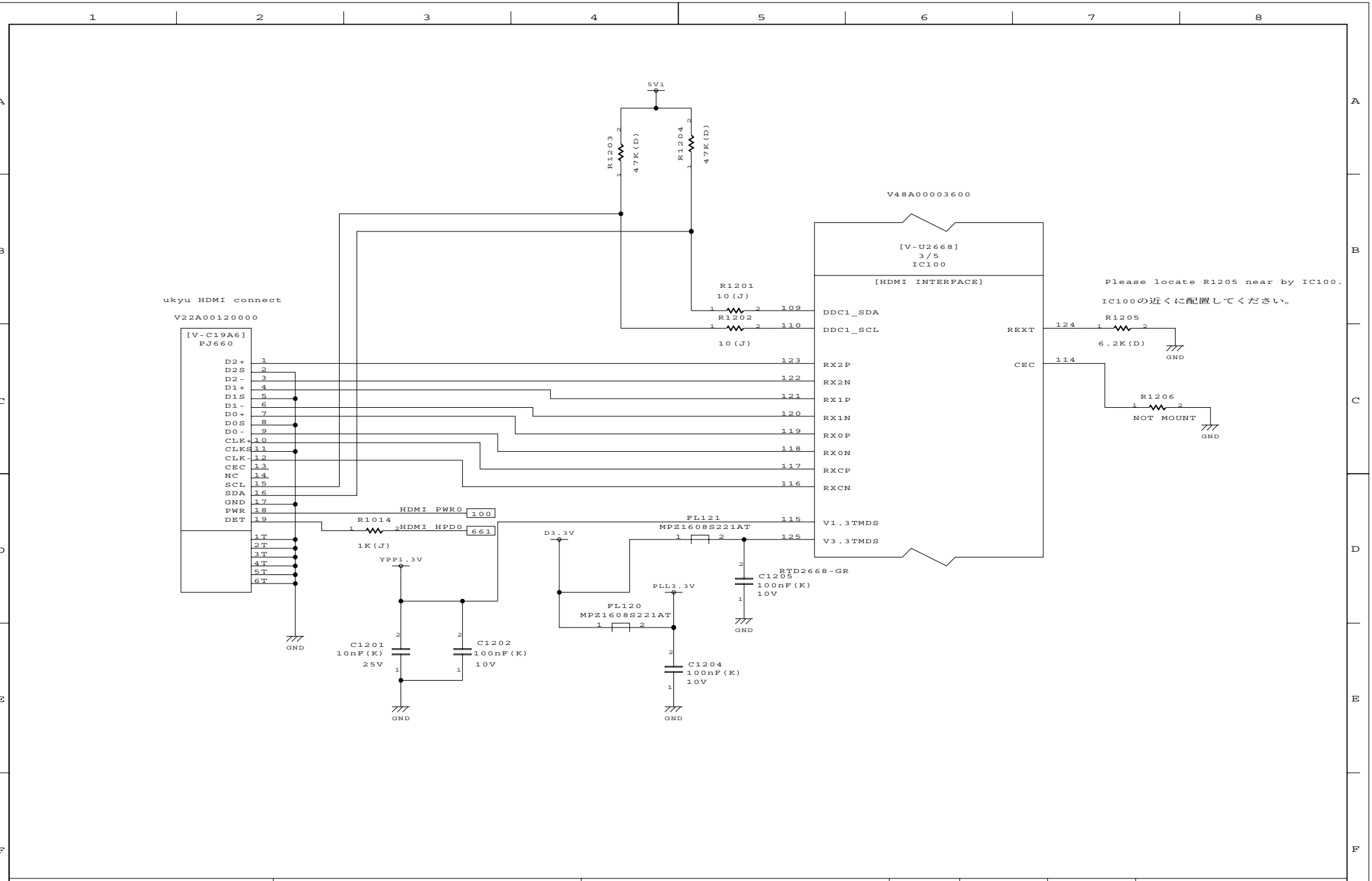

DESIGNED BY	TITLE	FUNCTION	SH.NO.	PAGE NO.	REV.MARK	DRAWING.NO.
NAMIKAWA	ASEAN H-1 PJ	HDMI Interface	102	3	00	

2011.06.24 13:39

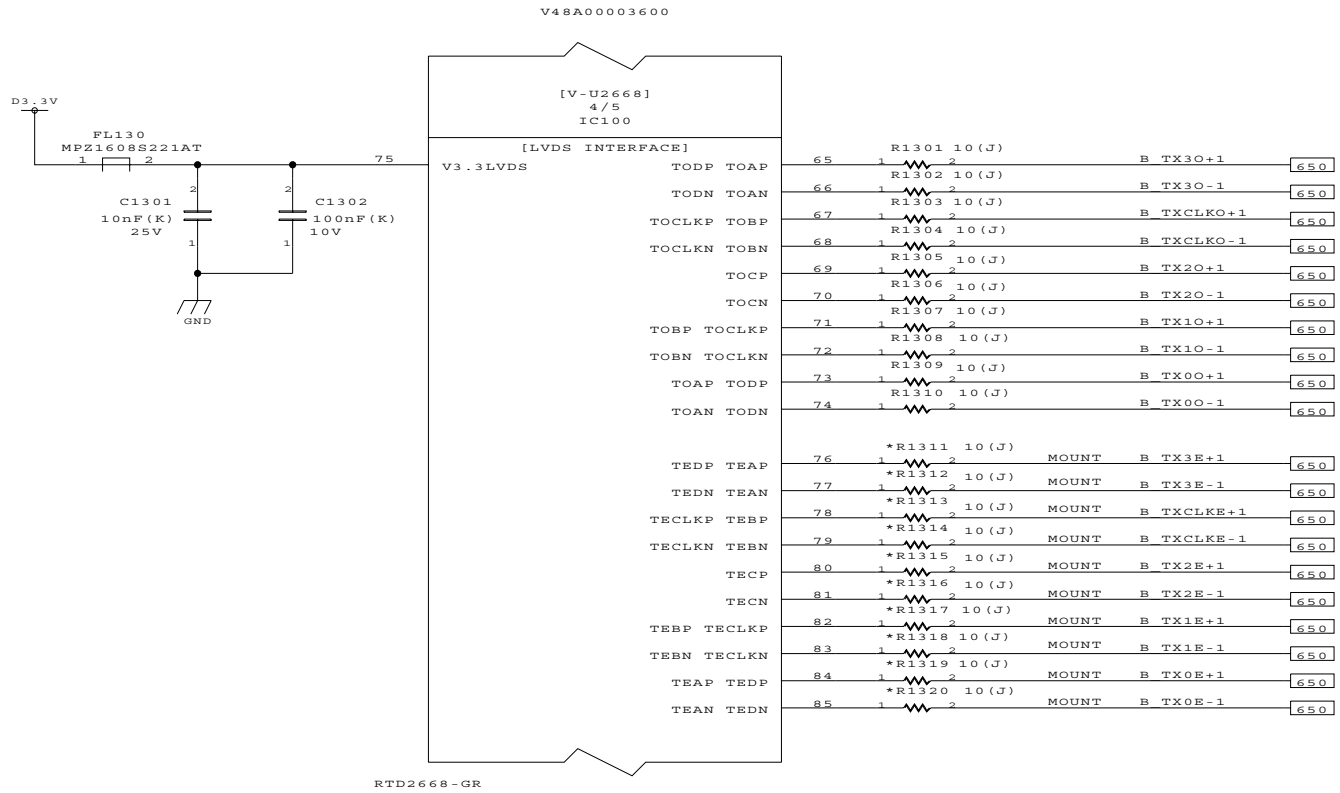

19, 32

R1301 - R1310

8Bit_Single_Format

24

R1301 - R1320

8Bit_Dual_Format

DESIGNED BY	TITLE	FUNCTION	SH.NO.	PAGE NO.	REV.MARK	DRAWING.NO.
IKEHARA	ASEAN H-1 PJ	LVDS Interface	103	4	00	

2011.06.24 13:39

TOSHIBA CORPORATION

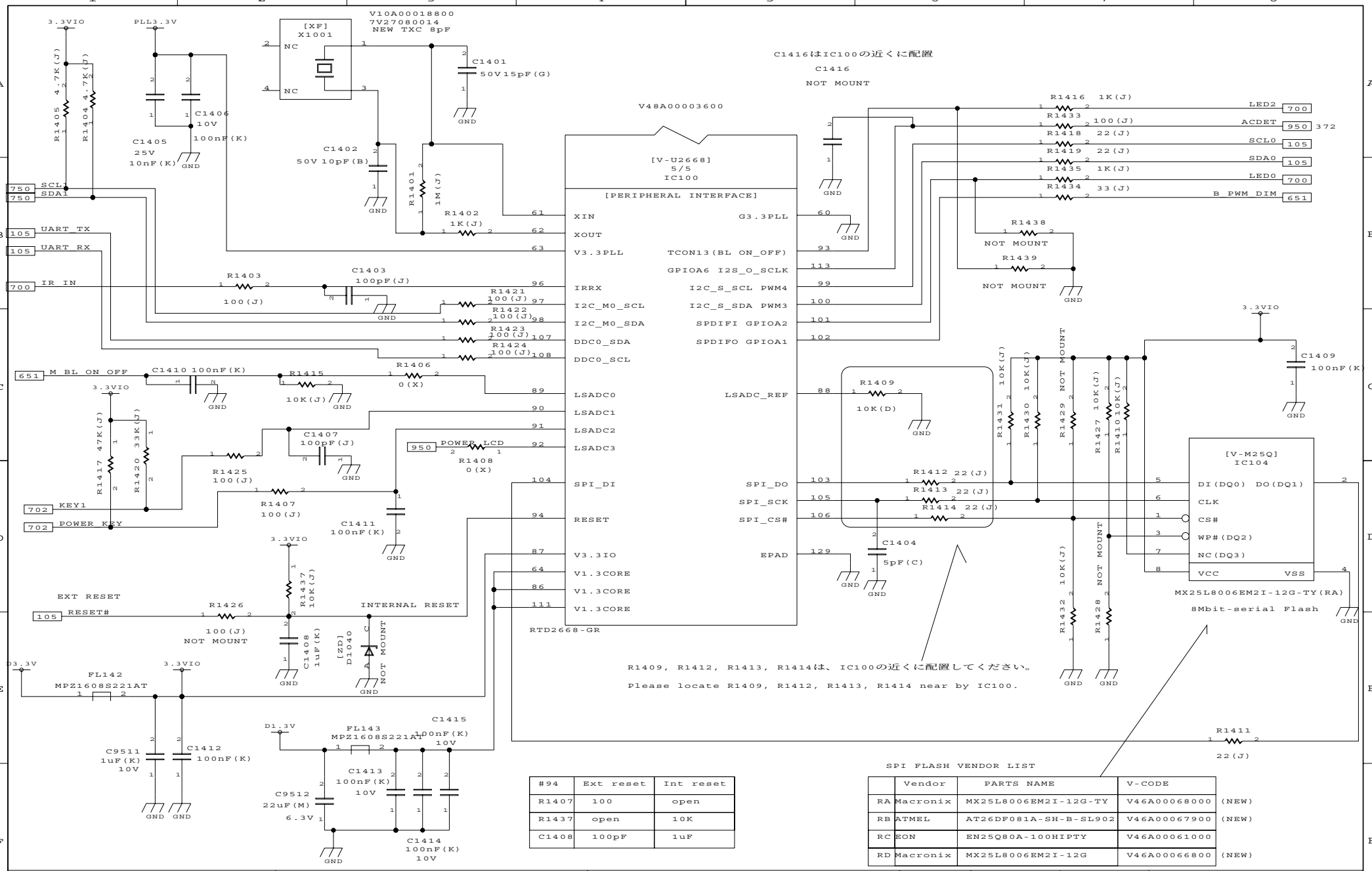

#94	Ext reset	Int reset
R1407	100	open
R1437	open	10K
C1408	100pF	1uF

SPI FLASH VENDOR LIST

	Vendor	PARTS NAME	V-CODE	
RA	Macronix	MX25L8006EM2I-12G-TY	V46A00068000	(NEW)
RB	ATMEL	AT26DF081A-SH-B-SL902	V46A00067900	(NEW)
RC	EON	EN25Q80A-100HIPTY	V46A00061000	
RD	Macronix	MX25L8006EM2I-12G	V46A00066800	(NEW)

DESIGNED BY	TITLE	FUNCTION	SH.NO.	PAGE NO.	REV.MARK	DRAWING.NO.
SASAKI	ASEAN H-1 PJ	Peripheral Interface	104	5	00	

2011.06.24 13:39

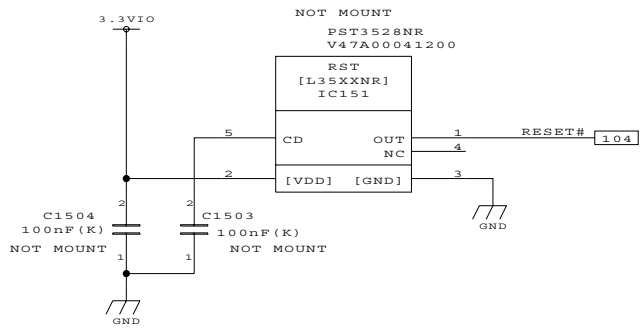

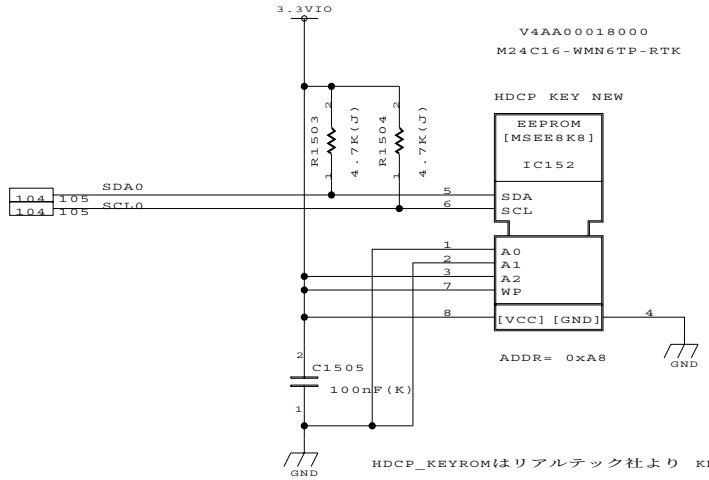

HDCP_KEYROMはリアルテック社より KEY書き込み済みのものを購入する。

ランニングチェンジで KEYをSoc内部に持たせ、 ROMをVAする。

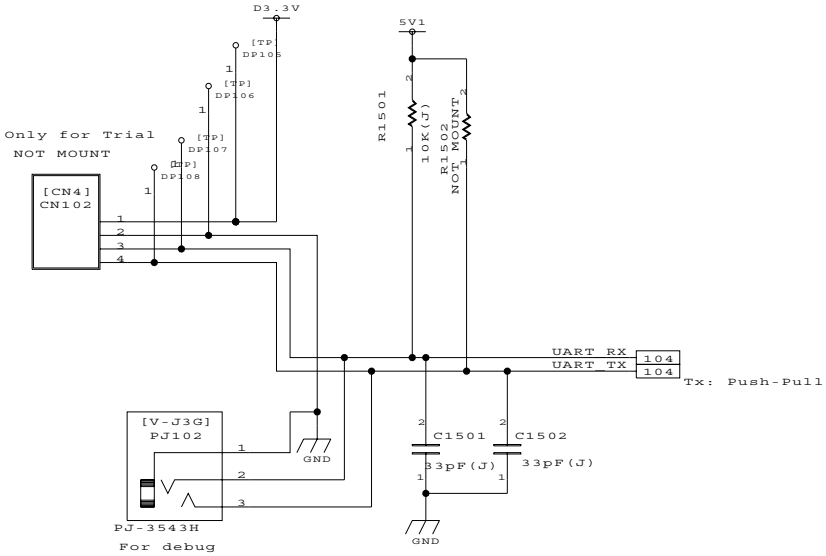

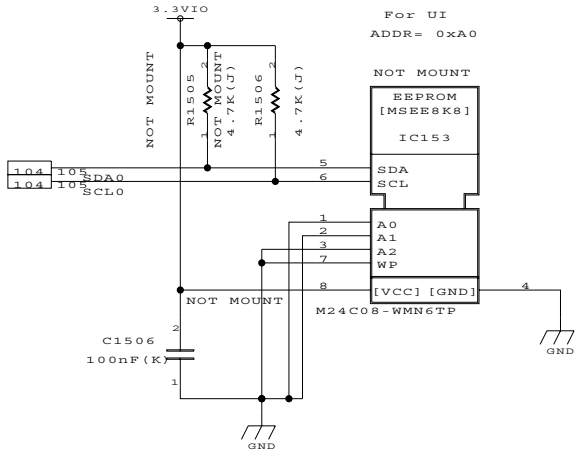

DESIGNED BY	TITLE	FUNCTION	SH.NO.	PAGE NO.	REV.MARK	DRAWING.NO.
SASAKI	ASEAN H-1 PJ	E2P/RST/Debug	105	6	00	

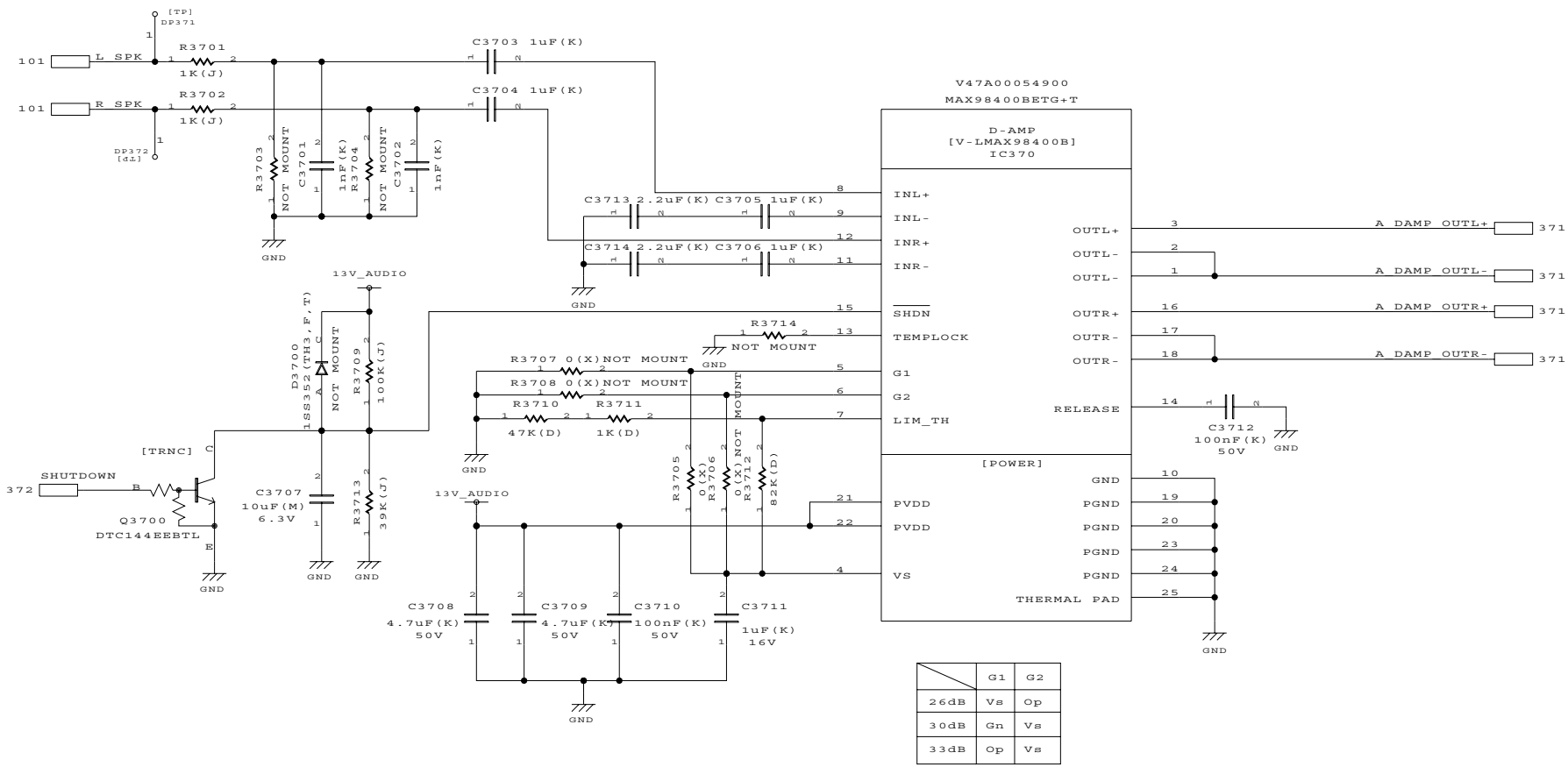

	G1	G2
26dB	Vs	Op
30dB	Gn	Vs
33dB	Op	Vs

DESIGNED BY	TITLE	FUNCTION	SH.NO.	PAGE NO.	REV.MARK	DRAWING.NO.
MORISHITA	ASEAN H-1 PJ	AUDIO D-AMP	370	7	00	

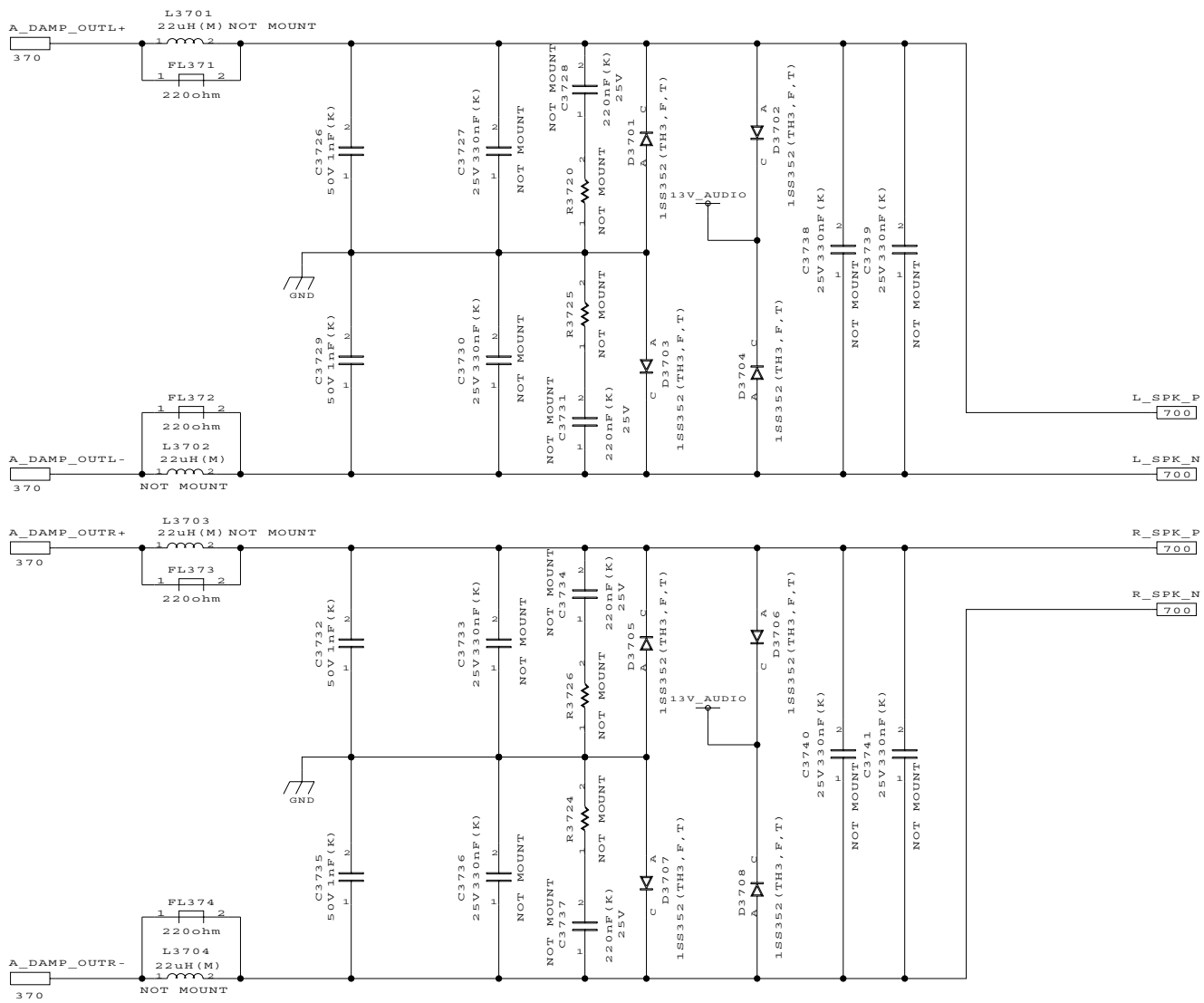

DESIGNED BY	TITLE	FUNCTION	SH.NO.	PAGE NO.	REV.MARK	DRAWING.NO.
MORISHITA	ASEAN H-1 PJ	AUDIO D-AMP OUT	371	8	00	

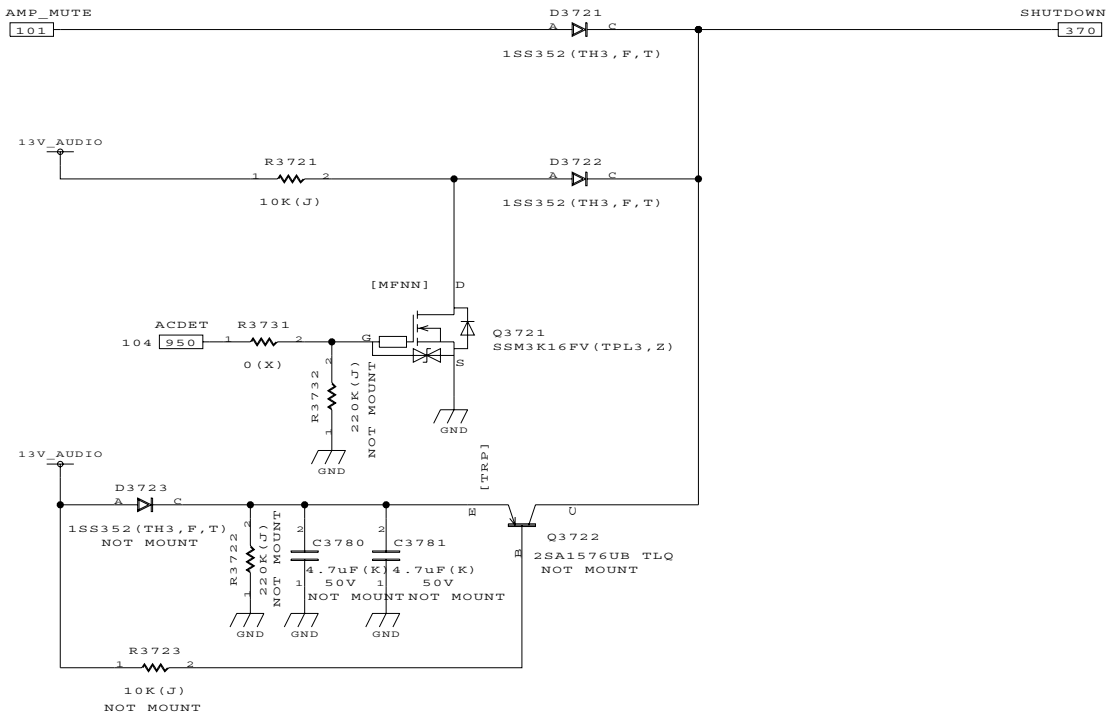

DESIGNED BY 2011/05/26	TITLE	FUNCTION	SH.NO.	PAGE NO.	REV.MARK	DRAWING.NO.
MORISHITA	ASEAN H-1 PJ	AUDIO_MUTE	373	9	00	

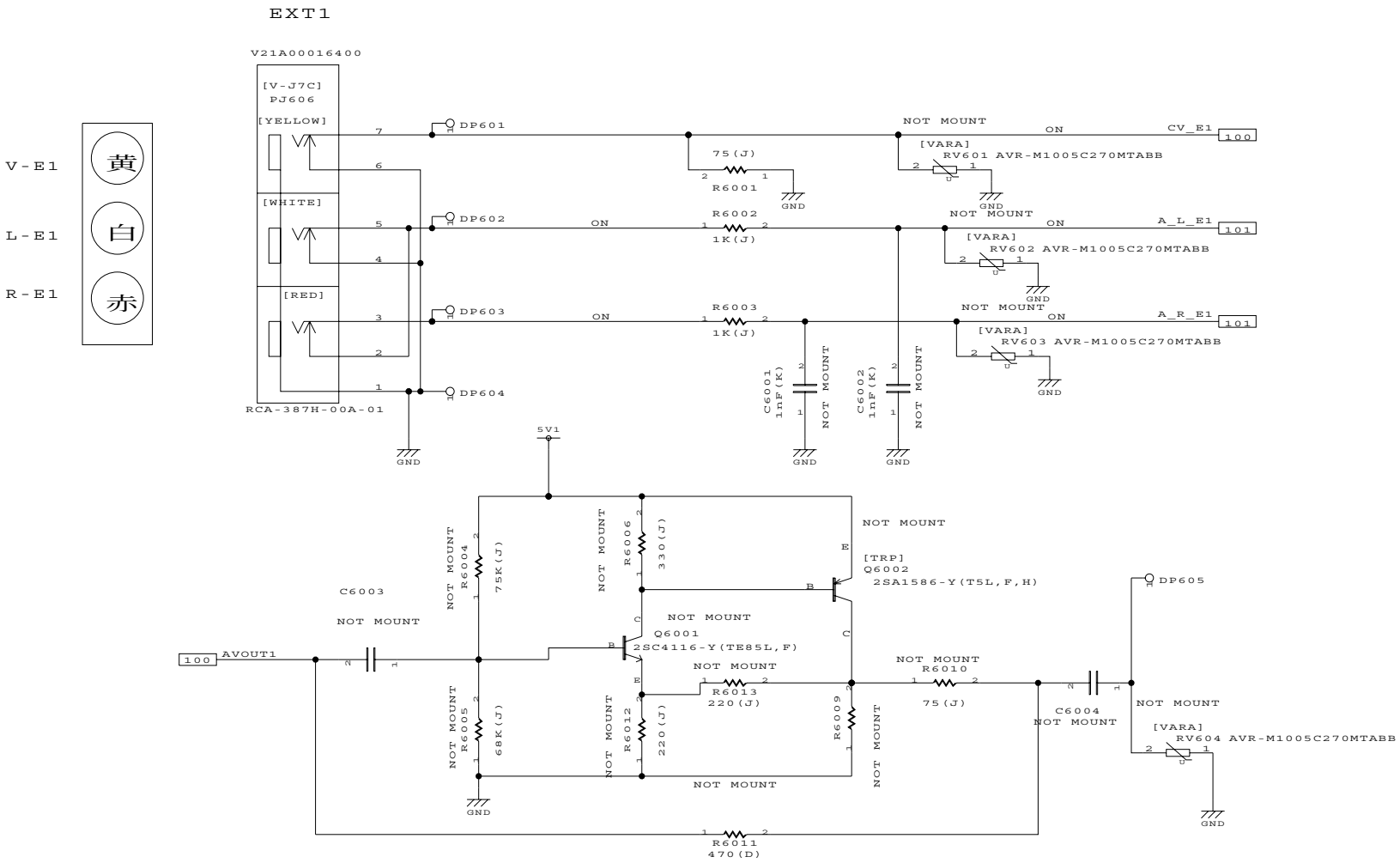

Use 100uF in case of measurement for C6003 and C6004.

DESIGNED BY	TITLE	FUNCTION	SH.NO.	PAGE NO.	REV.MARK	DRAWING.NO.
MORISHITA/KAWAMOTO	ASEAN H-1 PJ	EXT1 COMPOSITE/VIDEO_OUT	601	10	00	

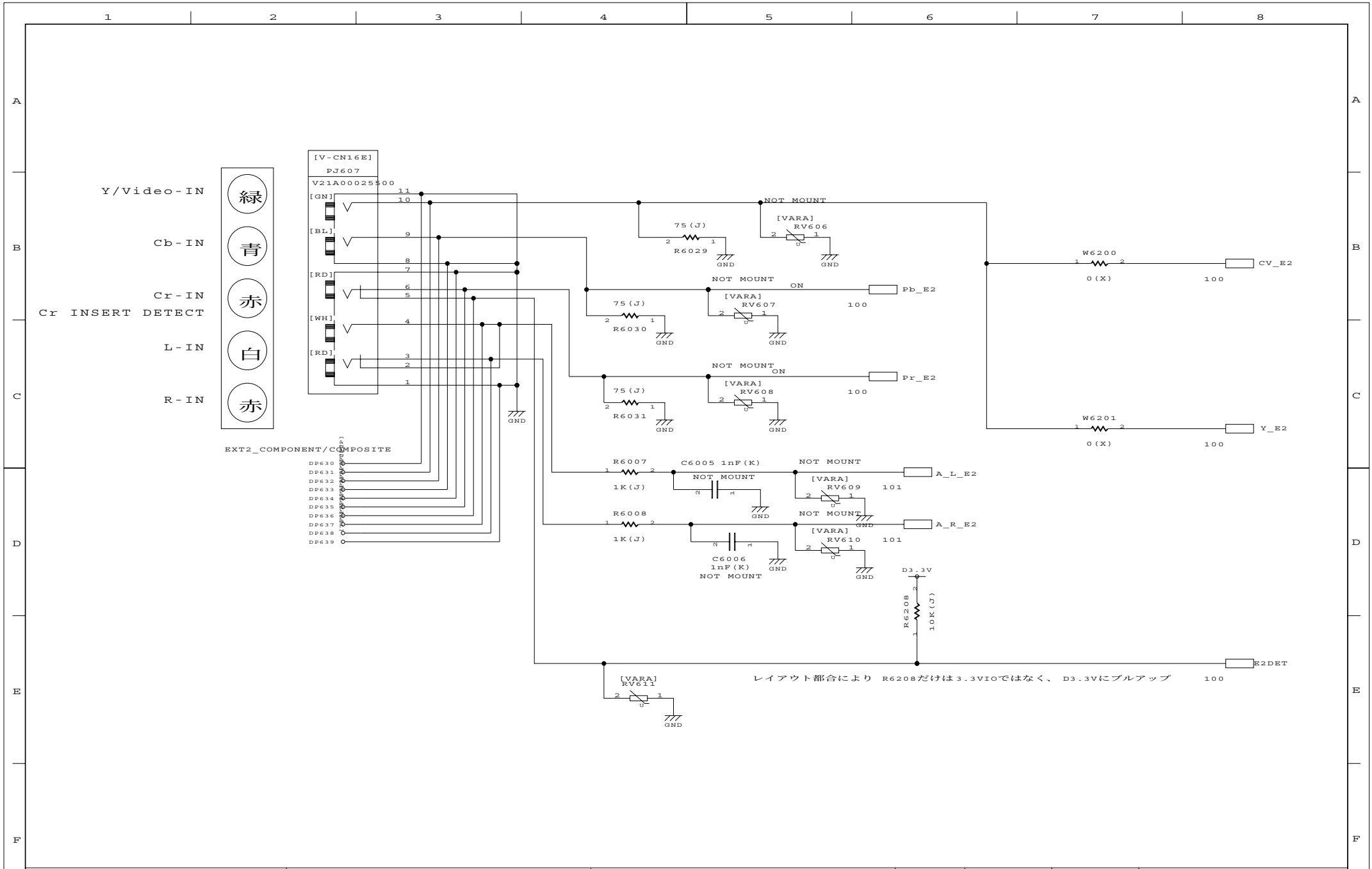

DESIGNED BY	TITLE	FUNCTION	SH.NO.	PAGE NO.	REV.MARK	DRAWING.NO.
MORISHITA/KAWAMOTO	ASEAN H-1 PJ	EXT2_COMPONENT/COMPOSITE	602	11	00	

2011.06.24 13:39

TOSHIBA CORPORATION

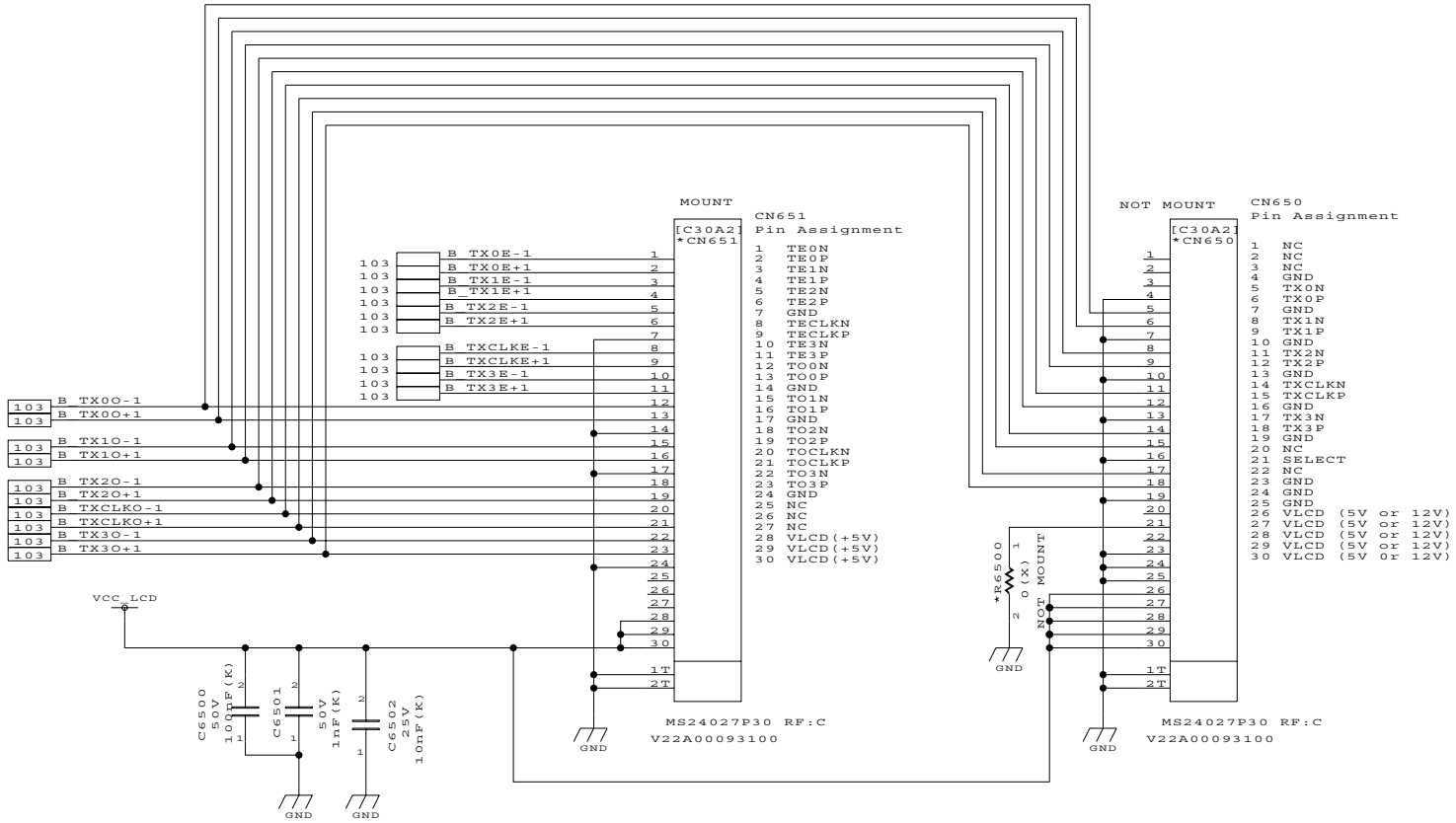

FHD_Panel

24

WXGA_Panel

19, 32

DESIGNED BY	TITLE	FUNCTION	SH.NO.	PAGE NO.	REV.MARK	DRAWING.NO.
IKEHARA	ASEAN H-1 PJ	LVDS CONNECTOR	650	12	00	

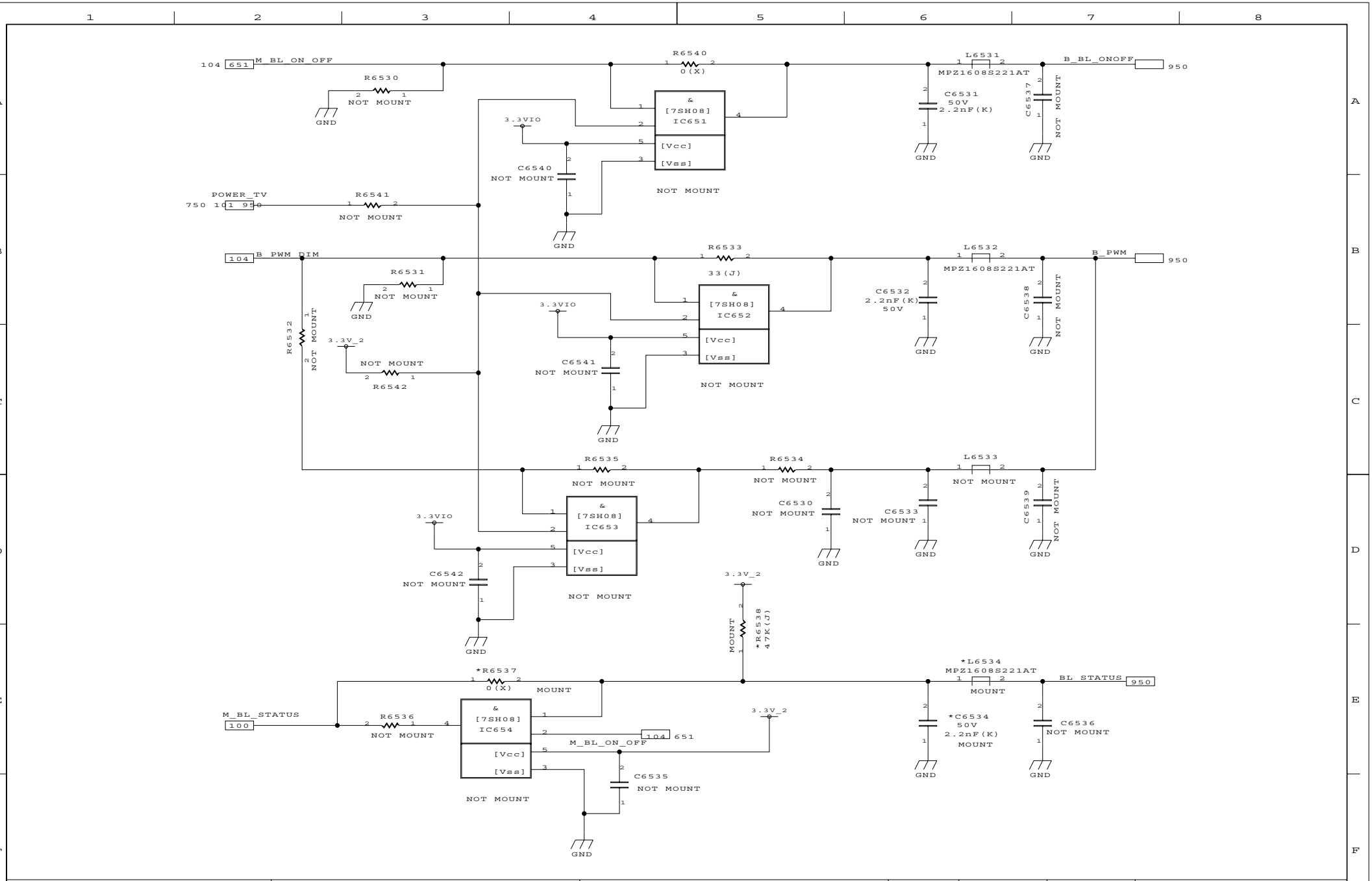

DESIGNED BY	TITLE	FUNCTION	SH.NO.	PAGE NO.	REV.MARK	DRAWING.NO.
IKEHARA	ASEAN H-1 PJ	BL_CONTROL & DIMMING	651	13	00	

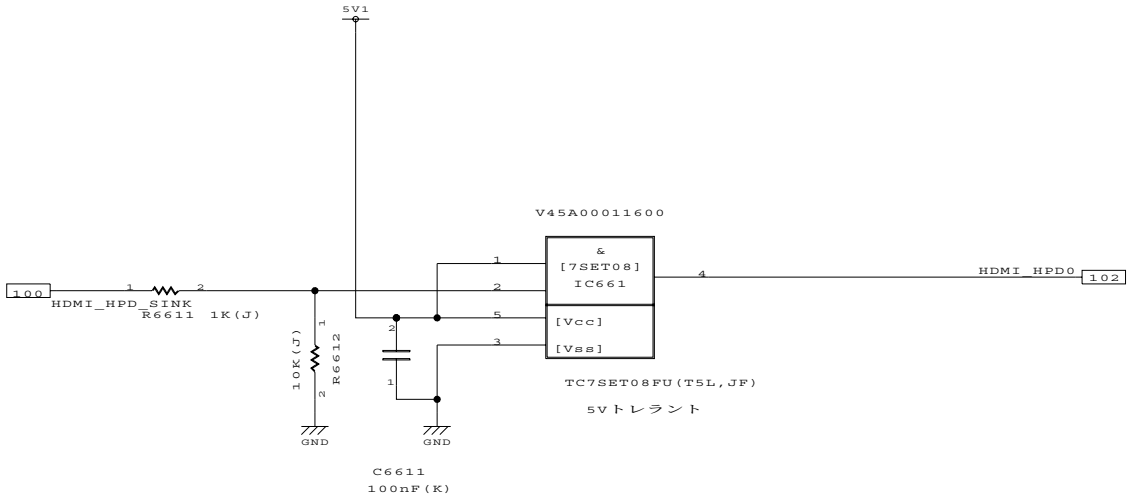

DESIGNED BY	TITLE	FUNCTION	SH.NO.	PAGE NO.	REV.MARK	DRAWING.NO.
NAMIKAWA	ASEAN H-1 PJ	HDMI HPD	661	14	00	

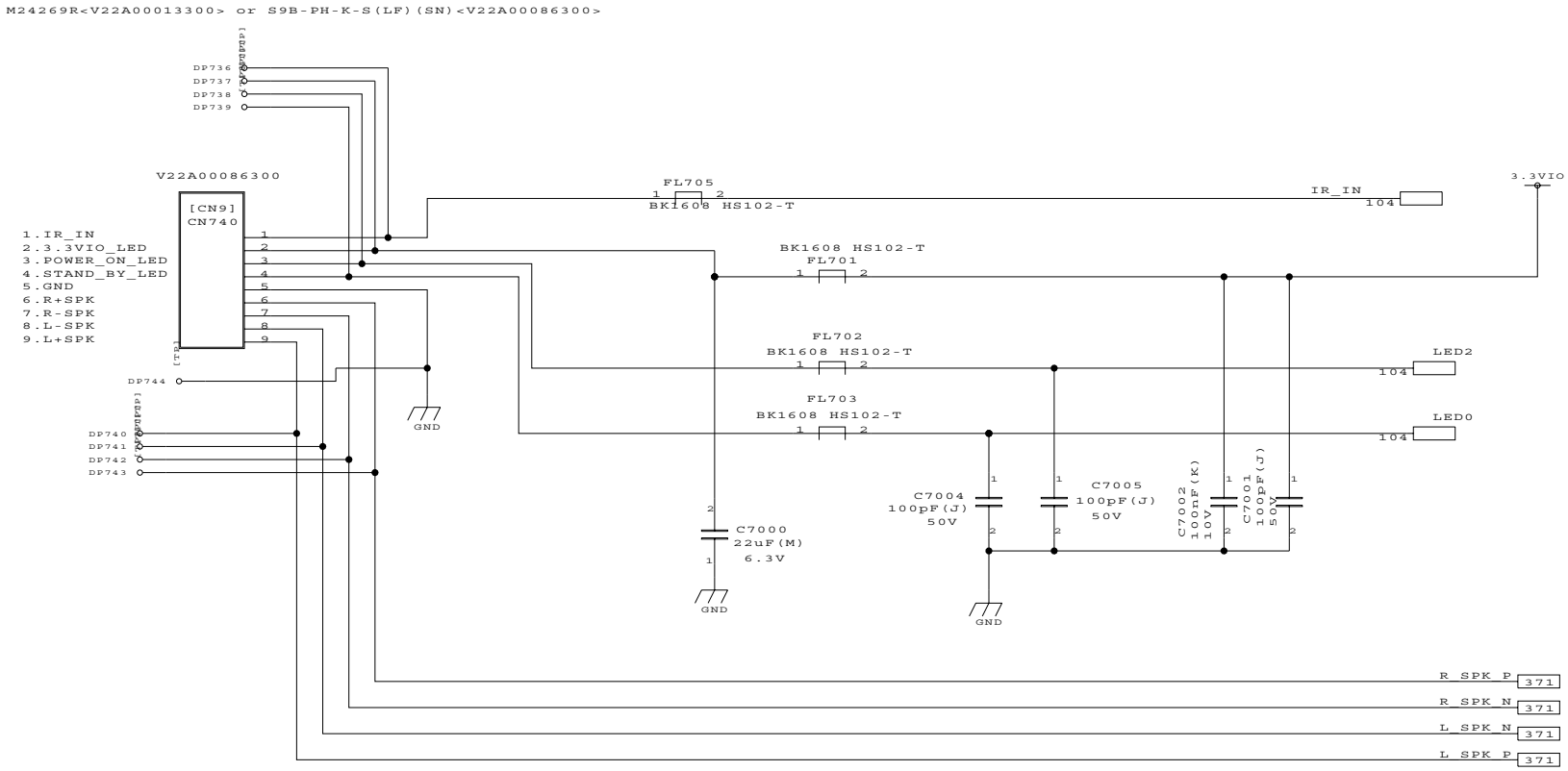

DESIGNED BY	TITLE	FUNCTION	SH.NO.	PAGE NO.	REV.MARK	DRAWING.NO.
SASAKI	ASEAN H-1 PJ	LED/KEY/IR IF	700	15	00	

5T03655D

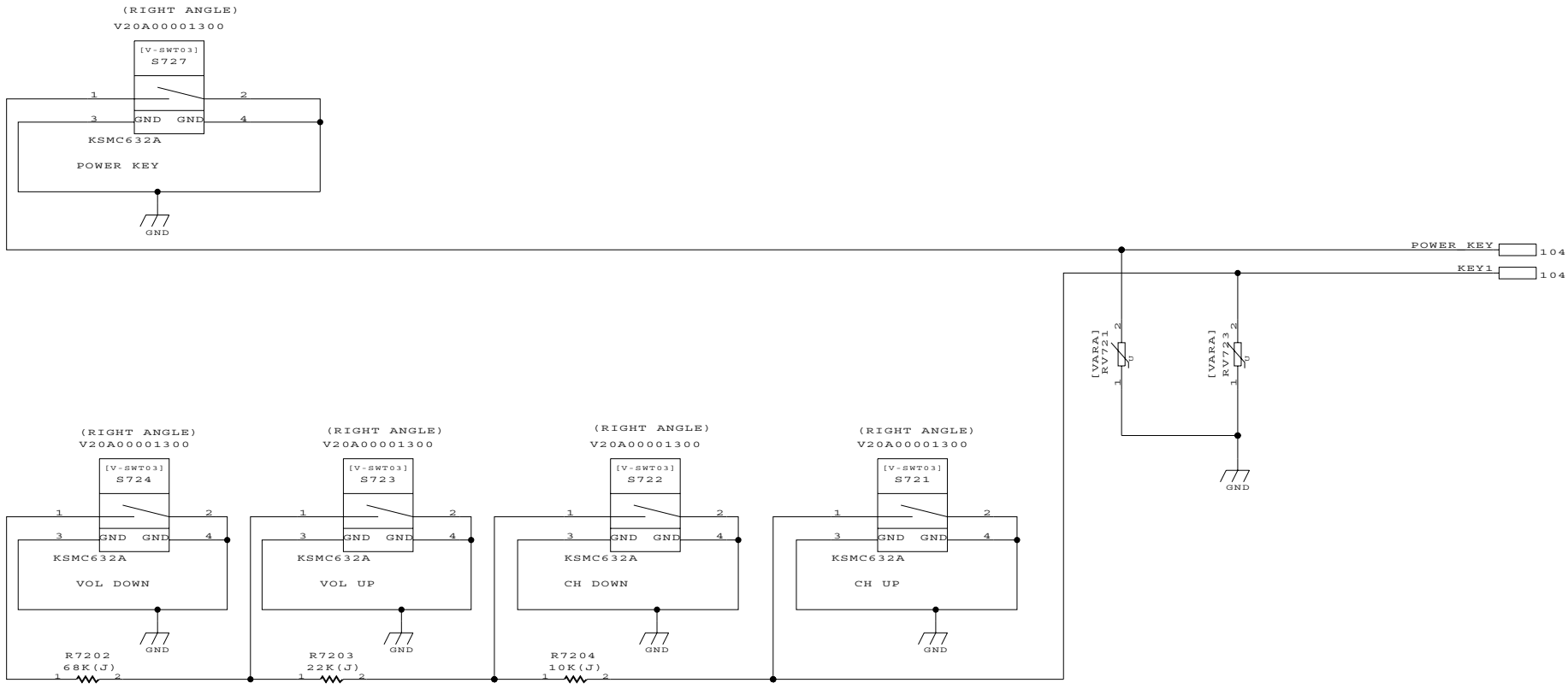

DESIGNED BY	TITLE	FUNCTION	SH.NO.	PAGE NO.	REV.MARK	DRAWING.NO.
SASAKI	ASEAN H-1 PJ	SIDE KEY IF	702	16	00	

2011.06.24 13:39

TOSHIBA CORPORATION

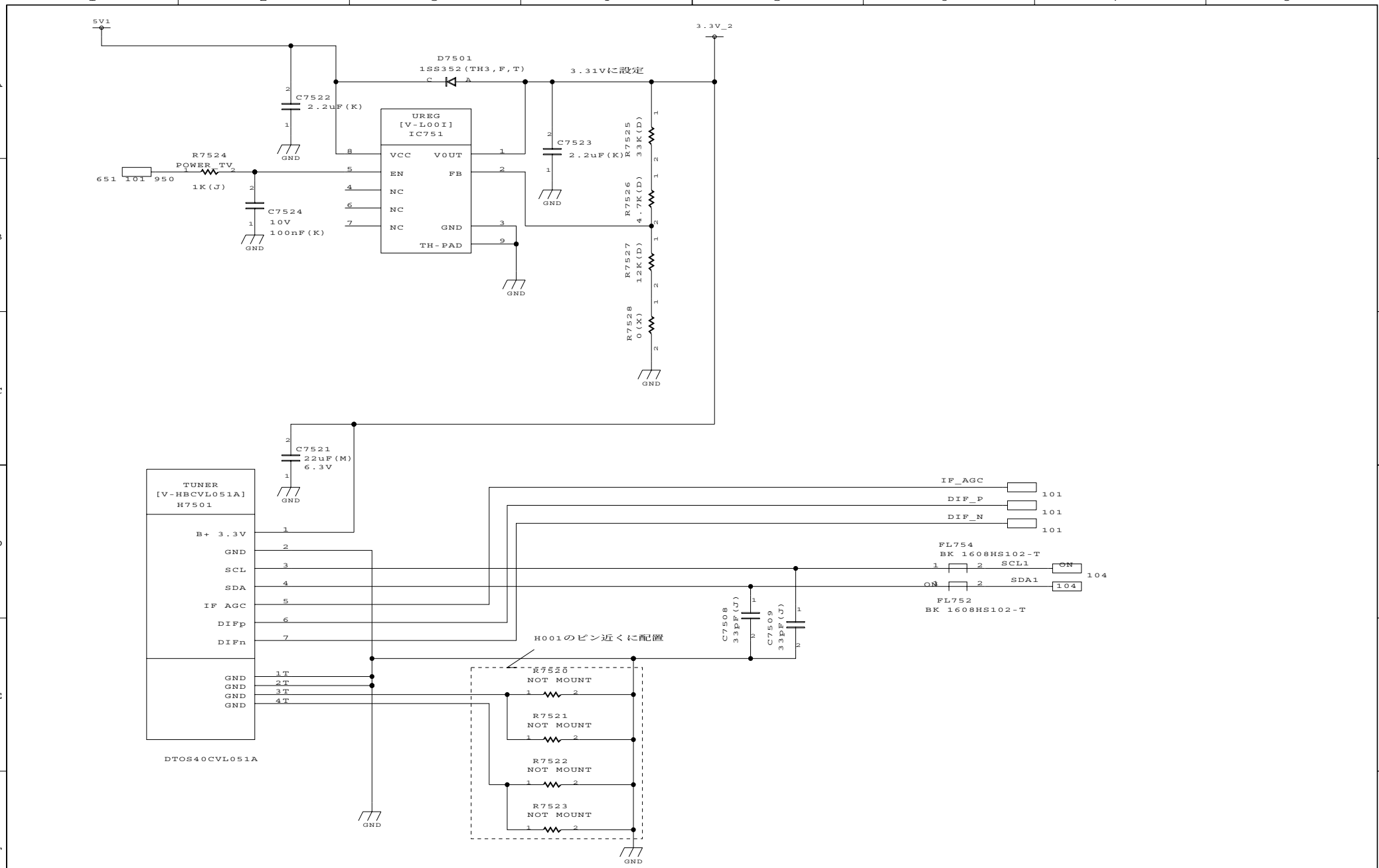

DESIGNED BY	TITLE	FUNCTION	SH.NO.	PAGE NO.	REV.MARK	DRAWING.NO.
ARAKI/ISHIKAWA	ASEAN H-1 PJ	Tuner (SAMSUNG)	750	17	00	

2011.06.24 13:39

TOSHIBA CORPORATION

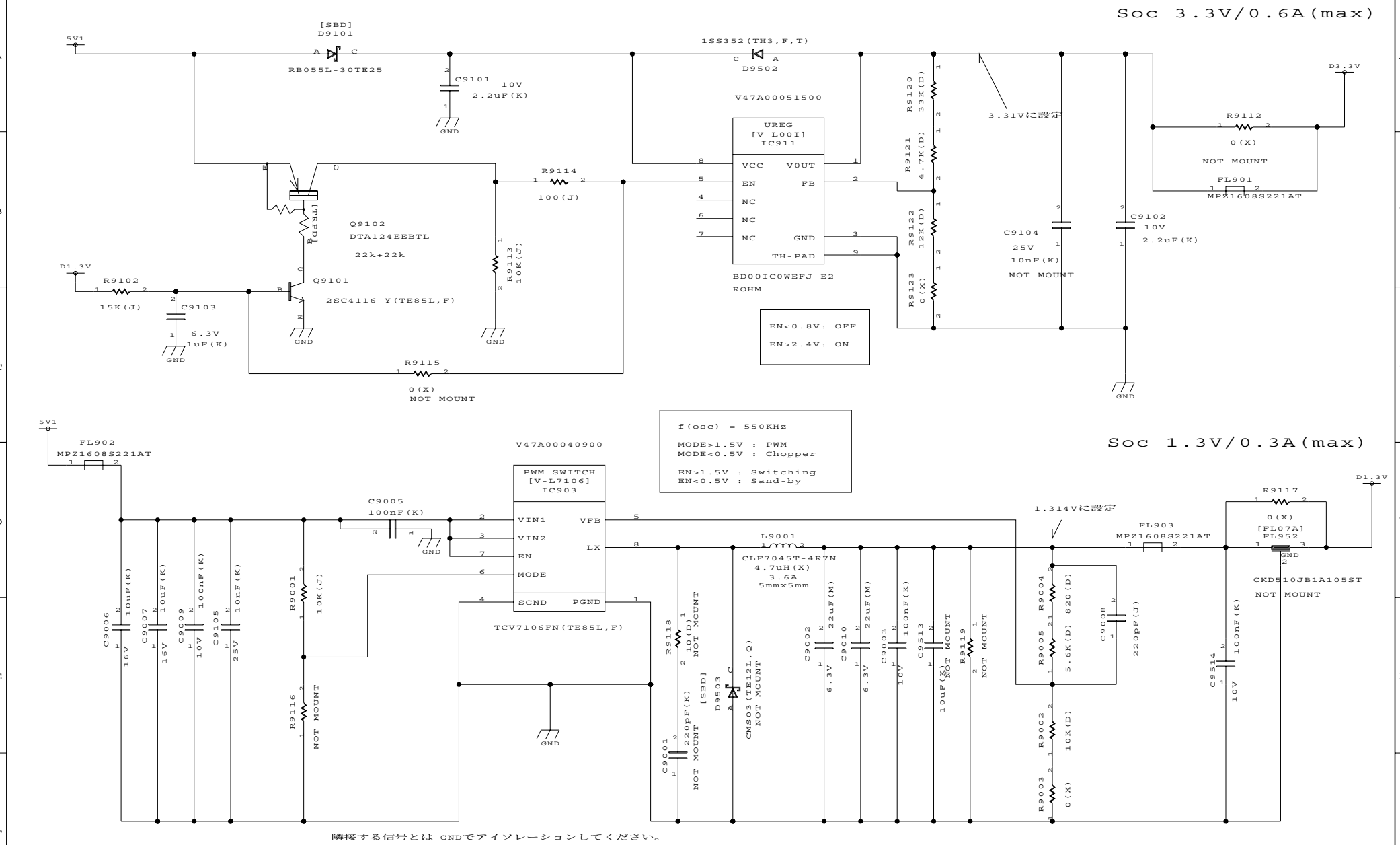

隣接する信号とは GNDでアイソレーションしてください。

DESIGNED BY	TITLE	FUNCTION	SH.NO.	PAGE NO.	REV.MARK	DRAWING.NO.
SASAKI	ASEAN H-1 PJ	3.3V LDO/1.3V DCDC	901	18	00	

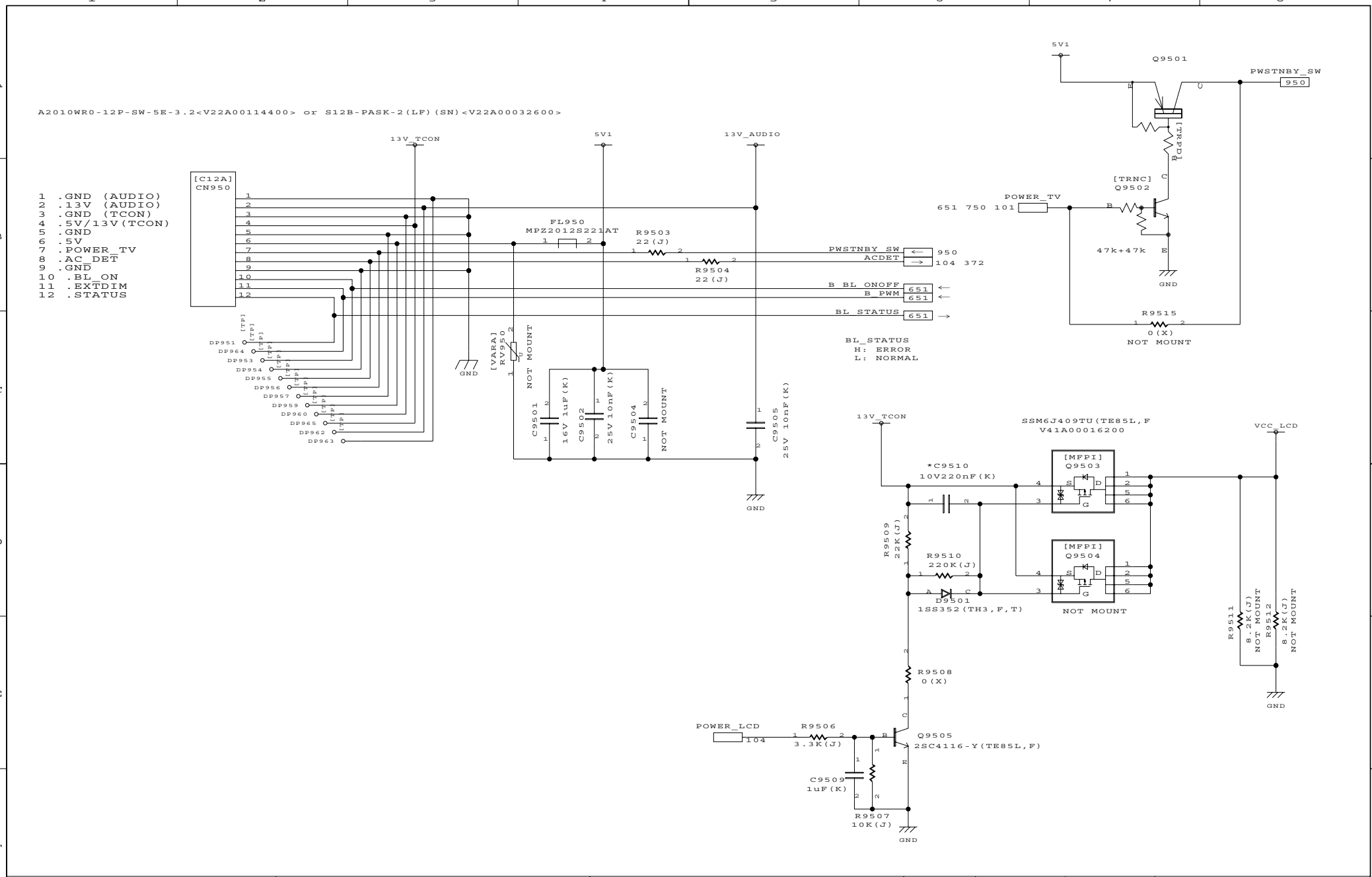

DESIGNED BY	TITLE	FUNCTION	SH.NO.	PAGE NO.	REV.MARK	DRAWING.NO.
SASAKI	ASEAN H-1 PJ	SIGNAL/LOWB CONNECTOR	950	19	00	