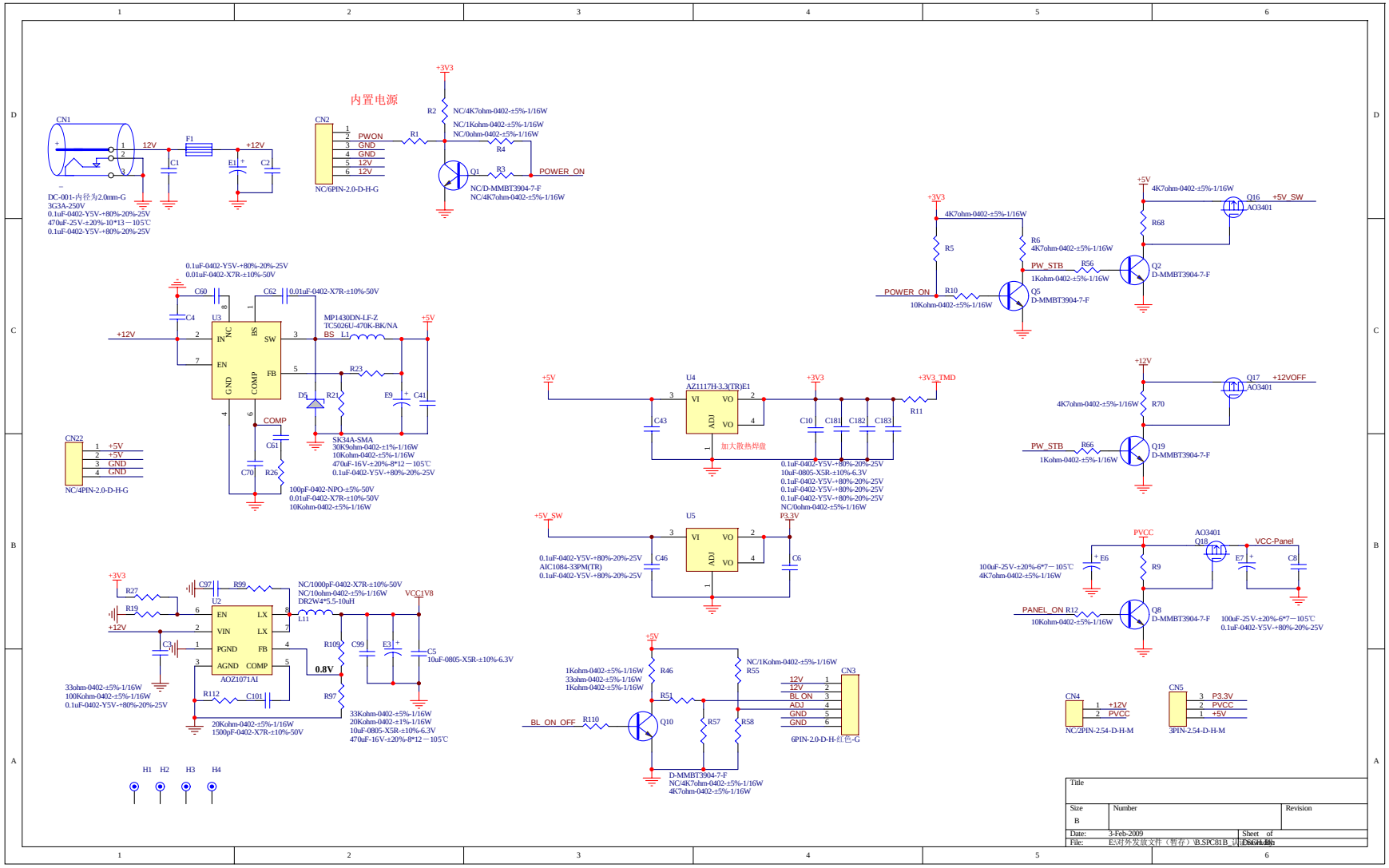
内置电源
CN1
DC-001-内径为2.0mm-G
3G3A-250V
0.1uF-0402-Y5V-+80%-20%-25V
470uF-25V-±20%-10*13－105℃
0.1uF-0402-Y5V-+80%-20%-25V
12V
F1
+12V
C1
E1
C2
CN2
PWON
GND
GND
12V
12V
NC/6PIN-2.0-D-H-G
+3V3
R2
NC/4K7ohm-0402-±5%-1/16W
NC/1Kohm-0402-±5%-1/16W
NC/0ohm-0402-±5%-1/16W
R1
R4
Q1
R3
POWER_ON
NC/D-MMBT3904-7-F
NC/4K7ohm-0402-±5%-1/16W
0.1uF-0402-Y5V-+80%-20%-25V
0.01uF-0402-X7R-±10%-50V
C60
C62
0.01uF-0402-X7R-±10%-50V
C4
U3
+12V
IN
NC
BS
SW
EN
GND
COMP
FB
MP1430DN-LF-Z
TC5026U-470K-BK/NA
BS
L1
+5V
R23
D5
R21
E9
C41
SK34A-SMA
30Kohm-0402-±1%-1/16W
10Kohm-0402-±5%-1/16W
470uF-16V-±20%-8*12－105℃
0.1uF-0402-Y5V-+80%-20%-25V
COMP
C61
C70
R26
100pF-0402-NPO-±5%-50V
0.01uF-0402-X7R-±10%-50V
10Kohm-0402-±5%-1/16W
CN22
+5V
+5V
GND
GND
NC/4PIN-2.0-D-H-G
+3V3
R27
R19
+12V
C97
R99
NC/1000pF-0402-X7R-±10%-50V
NC/10ohm-0402-±5%-1/16W
DR2W4*5.5-10uH
L11
VCC1V8
U2
EN
VIN
PGND
AGND
LX
LX
FB
COMP
AOZ1071AI
C3
R109
C99
E3
C5
10uF-0805-X5R-±10%-6.3V
0.8V
R97
R112
C101
33ohm-0402-±5%-1/16W
100Kohm-0402-±5%-1/16W
0.1uF-0402-Y5V-+80%-20%-25V
20Kohm-0402-±5%-1/16W
1500pF-0402-X7R-±10%-50V
33Kohm-0402-±5%-1/16W
20Kohm-0402-±1%-1/16W
10uF-0805-X5R-±10%-6.3V
470uF-16V-±20%-8*12－105℃
H1
H2
H3
H4
+5V
U4
AZ1117H-3.3(TR)E1
VI
VO
ADJ
VO
C43
加大散热焊盘
+3V3
C10
C181
C182
C183
+3V3_TMD
R11
0.1uF-0402-Y5V-+80%-20%-25V
10uF-0805-X5R-±10%-6.3V
0.1uF-0402-Y5V-+80%-20%-25V
0.1uF-0402-Y5V-+80%-20%-25V
0.1uF-0402-Y5V-+80%-20%-25V
NC/0ohm-0402-±5%-1/16W
+5V_SW
U5
VI
VO
ADJ
VO
P3.3V
C46
C6
0.1uF-0402-Y5V-+80%-20%-25V
AIC1084-33PM(TR)
0.1uF-0402-Y5V-+80%-20%-25V
+5V
1Kohm-0402-±5%-1/16W
33ohm-0402-±5%-1/16W
1Kohm-0402-±5%-1/16W
R46
R51
NC/1Kohm-0402-±5%-1/16W
R55
BL_ON_OFF
R110
Q10
R57
R58
CN3
12V
12V
BL_ON
ADJ
GND
GND
6PIN-2.0-D-H-红色-G
D-MMBT3904-7-F
NC/4K7ohm-0402-±5%-1/16W
4K7ohm-0402-±5%-1/16W
+3V3
4K7ohm-0402-±5%-1/16W
R5
R6
4K7ohm-0402-±5%-1/16W
PW_STB
R56
1Kohm-0402-±5%-1/16W
Q2
D-MMBT3904-7-F
POWER_ON
R10
10Kohm-0402-±5%-1/16W
Q5
D-MMBT3904-7-F
+5V
4K7ohm-0402-±5%-1/16W
Q16
+5V_SW
AO3401
R68
+12V
Q17
+12VOFF
AO3401
4K7ohm-0402-±5%-1/16W
R70
PW_STB
R66
1Kohm-0402-±5%-1/16W
Q19
D-MMBT3904-7-F
PVCC
AO3401
Q18
VCC-Panel
E6
R9
E7
C8
100uF-25V-±20%-6*7－105℃
4K7ohm-0402-±5%-1/16W
PANEL_ON
R12
10Kohm-0402-±5%-1/16W
Q8
D-MMBT3904-7-F
100uF-25V-±20%-6*7－105℃
0.1uF-0402-Y5V-+80%-20%-25V
CN4
+12V
PVCC
NC/2PIN-2.54-D-H-M
CN5
P3.3V
PVCC
+5V
3PIN-2.54-D-H-M
Title
Size
B
Number
Revision
Date:
3-Feb-2009
Sheet
of
File:
E:\对外发放文件（暂存）\B.SPC81B_认证\SPC81B.Sch

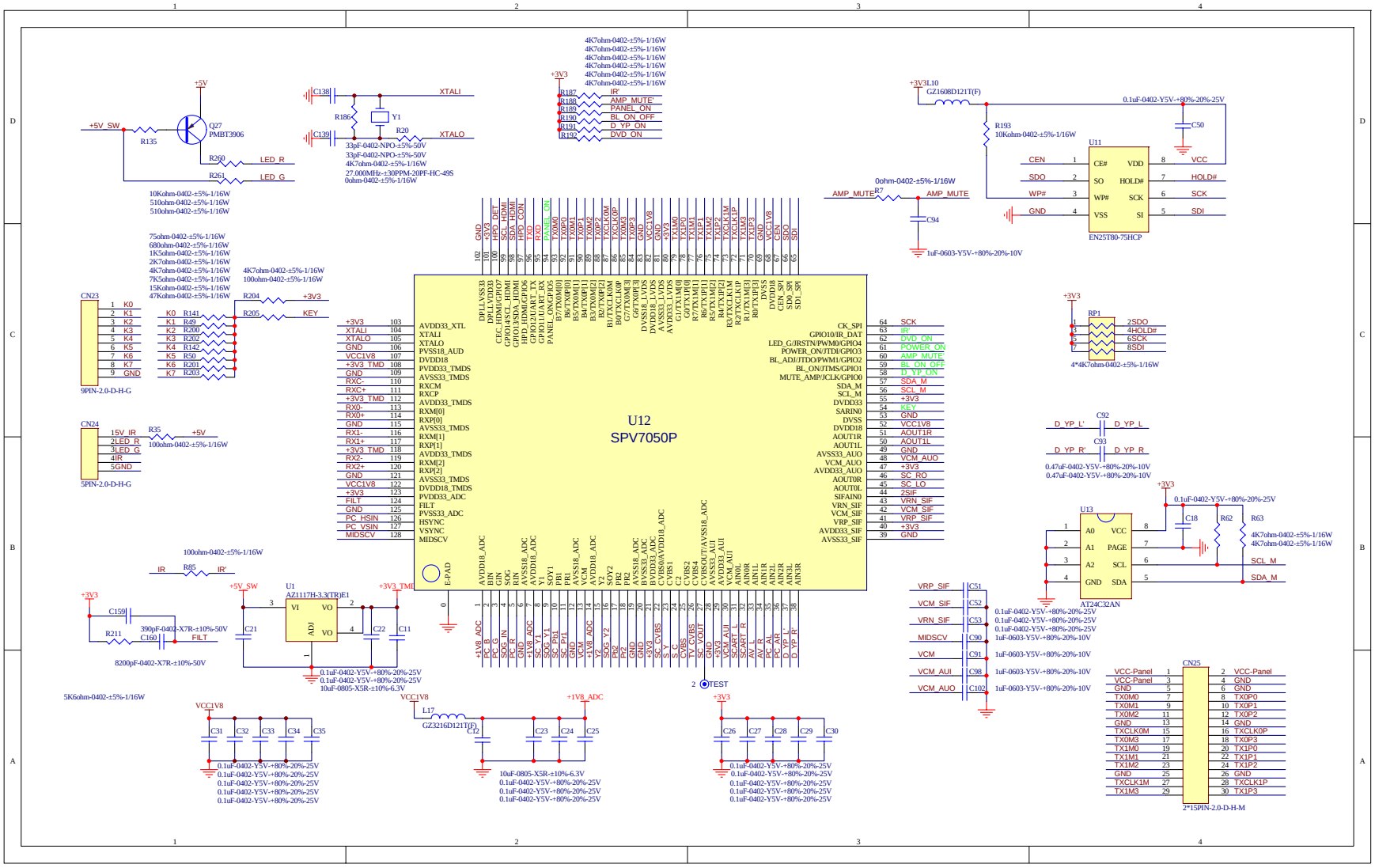
U12
SPV7050P
U11
EN25T80-75HCP
U13
AT24C32AN
U1
AZ1117H-3.3(TR)E1
CN23
9PIN-2.0-D-H-G
CN24
5PIN-2.0-D-H-G
CN25
2*15PIN-2.0-D-H-M
Q27
PMBT3906
Y1
27.000MHz-±30PPM-20PF-HC-49S
L17
GZ3216D121T(F)
L10
GZ1608D121T(F)
RP1
4*4K7ohm-0402-±5%-1/16W
XTALI
XTALO
LED_R
LED_G
KEY
IR'
AMP_MUTE'
PANEL_ON
BL_ON_OFF
D_YP_ON
DVD_ON
AMP_MUTE
SCK
SDI
SDO
HOLD#
SCL_M
SDA_M
VCC1V8
+1V8_ADC
TEST

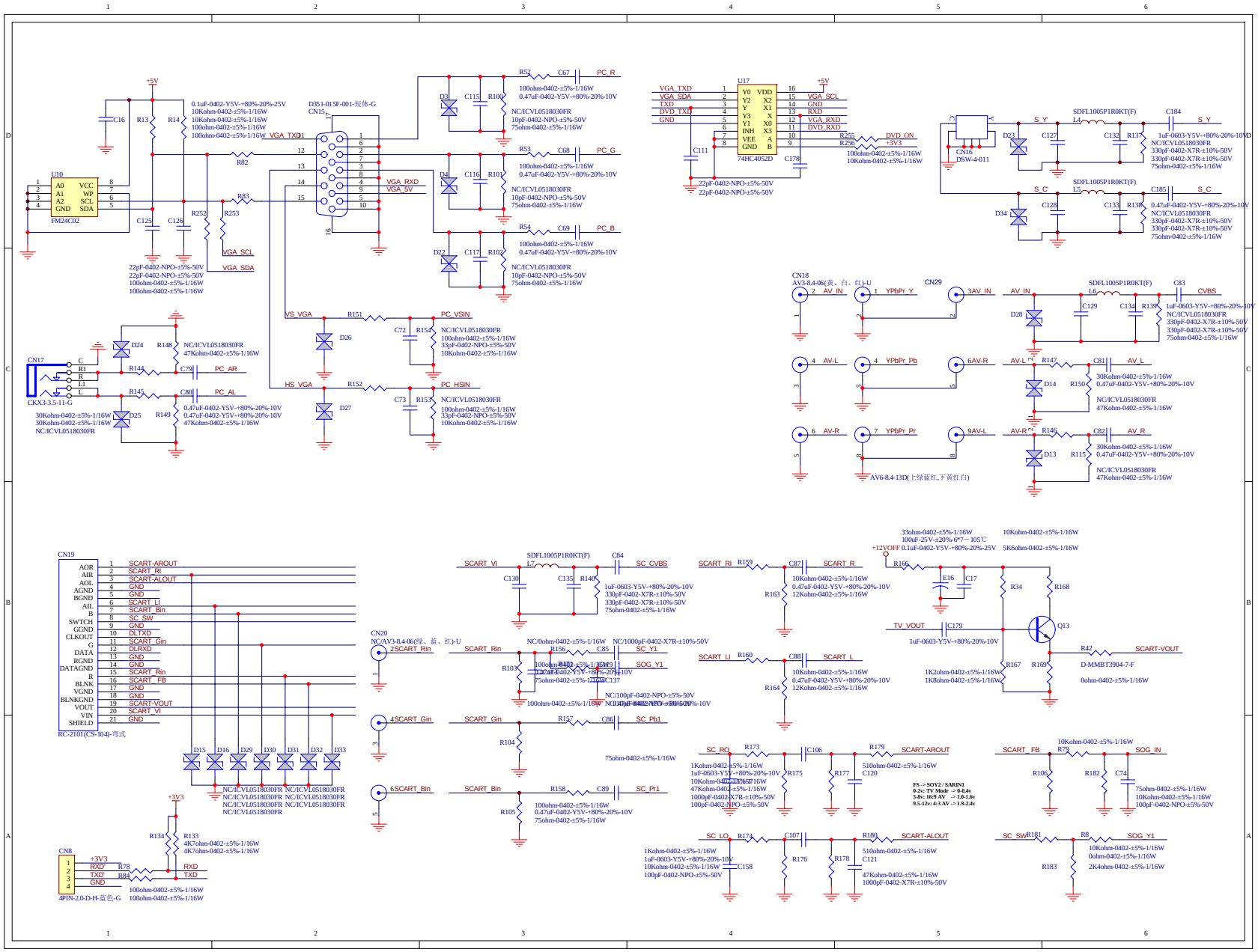
U10
FM24C02
A0 A1 A2 GND
VCC WP SCL SDA
+5V
C16 R13 R14
0.1uF-0402-Y5V-+80%-20%-25V
10Kohm-0402-±5%-1/16W
100ohm-0402-±5%-1/16W
VGA_TXD
R82 R83
R252 R253
C125 C126
22pF-0402-NPO-±5%-50V
100ohm-0402-±5%-1/16W
VGA_SCL
VGA_SDA
D351-015F-001-短体-G
CN15
VGA_RXD
VGA_5V
R52 C67 PC_R
R53 C68 PC_G
R54 C69 PC_B
D3 C115 R100
D4 C116 R101
D22 C117 R102
NC/ICVL0518030FR
10pF-0402-NPO-±5%-50V
75ohm-0402-±5%-1/16W
VS_VGA
HS_VGA
R151 PC_VSIN
R152 PC_HSIN
D26 D27
C72 R154
C73 R153
33pF-0402-NPO-±5%-50V
10Kohm-0402-±5%-1/16W
CN17
CKX3-3.5-11-G
D24 R148 C79 PC_AR
D25 R149 C80 PC_AL
R144 R145
30Kohm-0402-±5%-1/16W
47Kohm-0402-±5%-1/16W
0.47uF-0402-Y5V-+80%-20%-10V
U17
74HC4052D
Y0 Y2 Y Y3 Y1 INH VEE GND
VDD X2 X1 X X0 X3 A B
VGA_TXD VGA_SDA TXD DVD_TXD GND
VGA_SCL GND RXD VGA_RXD DVD_RXD
R255 R256 DVD_ON
+3V3
C111 C178
CN16
DSW-4-011
D23 D34
S_Y S_C
SDFL1005P1R0KT(F)
L4 L5
C127 C128
C132 C133
R137 R138
C184 C185
1uF-0603-Y5V-+80%-20%-10V
NC/ICVL0518030FR
330pF-0402-X7R-±10%-50V
CN18
AV3-8.4-06(黄、白、红)-U
CN29
AV6-8.4-13D(上绿蓝红,下黄红白)
AV_IN AV_L AV_R
YPbPr_Y YPbPr_Pb YPbPr_Pr
3AV_IN 6AV-R 9AV-L
L6 D28
C129 C134
R139 C83 CVBS
D14 D13
R147 R146
C81 C82
R150 R115
30Kohm-0402-±5%-1/16W
47Kohm-0402-±5%-1/16W
CN19
RC-2101(CS-104)-弯式
AOR AIR AOL AGND BGND AIL B SWTCH GGND CLKOUT G DATA RGND DATAGND R BLNK VGND BLNKGND VOUT VIN SHIELD
SCART-AROUT SCART_RI SCART-ALOUT GND SCART_LI SCART_Bin SC_SW DLTXD SCART_Gin DLRXD SCART_Rin SCART_FB SCART-VOUT SCART_VI
D15 D16 D29 D30 D31 D32 D33
NC/ICVL0518030FR
CN20
NC/AV3-8.4-06(绿、蓝、红)-U
2SCART_Rin
4SCART_Gin
6SCART_Bin
SCART_VI SCART_Rin SCART_Gin SCART_Bin
SDFL1005P1R0KT(F)
L7
C84 SC_CVBS
C130 C135 R140
R156 C85 SC_Y1
R103 R102 C136 R149 SOG_Y1
R104 R157 C86 SC_Pb1
R105 R158 C89 SC_Pr1
NC/0ohm-0402-±5%-1/16W
NC/1000pF-0402-X7R-±10%-50V
NC/100pF-0402-NPO-±5%-50V
100ohm-0402-±5%-1/16W
75ohm-0402-±5%-1/16W
SCART_RI SCART_LI
R159 R160
C87 C88
SCART_R SCART_L
R163 R164
10Kohm-0402-±5%-1/16W
0.47uF-0402-Y5V-+80%-20%-10V
12Kohm-0402-±5%-1/16W
+12VOFF
33ohm-0402-±5%-1/16W
100uF-25V-±20%-6*7一105℃
0.1uF-0402-Y5V-+80%-20%-25V
10Kohm-0402-±5%-1/16W
5K6ohm-0402-±5%-1/16W
R165 E16 C17
R34 R168
TV_VOUT C179
1uF-0603-Y5V-+80%-20%-10V
Q13
R42 SCART-VOUT
D-MMBT3904-7-F
R167 R169
1K2ohm-0402-±5%-1/16W
1K8ohm-0402-±5%-1/16W
0ohm-0402-±5%-1/16W
SC_RO
R173 C106 R179 SCART-AROUT
1Kohm-0402-±5%-1/16W
1uF-0603-Y5V-+80%-20%-10V
10Kohm-0402-±5%-1/16W
47Kohm-0402-±5%-1/16W
1000pF-0402-X7R-±10%-50V
100pF-0402-NPO-±5%-50V
R175 R177
510ohm-0402-±5%-1/16W
C120
FS -> SOY2 / SARIN1
0-2v: TV Mode -> 0-0.4v
5-8v: 16:9 AV -> 1.0-1.6v
9.5-12v: 4:3 AV -> 1.9-2.4v
SCART_FB
R79 10Kohm-0402-±5%-1/16W
R106 R182 C74
75ohm-0402-±5%-1/16W
10Kohm-0402-±5%-1/16W
100pF-0402-NPO-±5%-50V
SC_LO
R174 C107 R180 SCART-ALOUT
1Kohm-0402-±5%-1/16W
1uF-0603-Y5V-+80%-20%-10V
10Kohm-0402-±5%-1/16W
100pF-0402-NPO-±5%-50V
C158
R176 R178
510ohm-0402-±5%-1/16W
C121
47Kohm-0402-±5%-1/16W
1000pF-0402-X7R-±10%-50V
SC_SW R181 R8 SOG_Y1
R183
10Kohm-0402-±5%-1/16W
0ohm-0402-±5%-1/16W
2K4ohm-0402-±5%-1/16W
+3V3
R134 R133
4K7ohm-0402-±5%-1/16W
CN8
4PIN-2.0-D-H-蓝色-G
RXD' TXD' GND
R78 R84
RXD TXD
100ohm-0402-±5%-1/16W

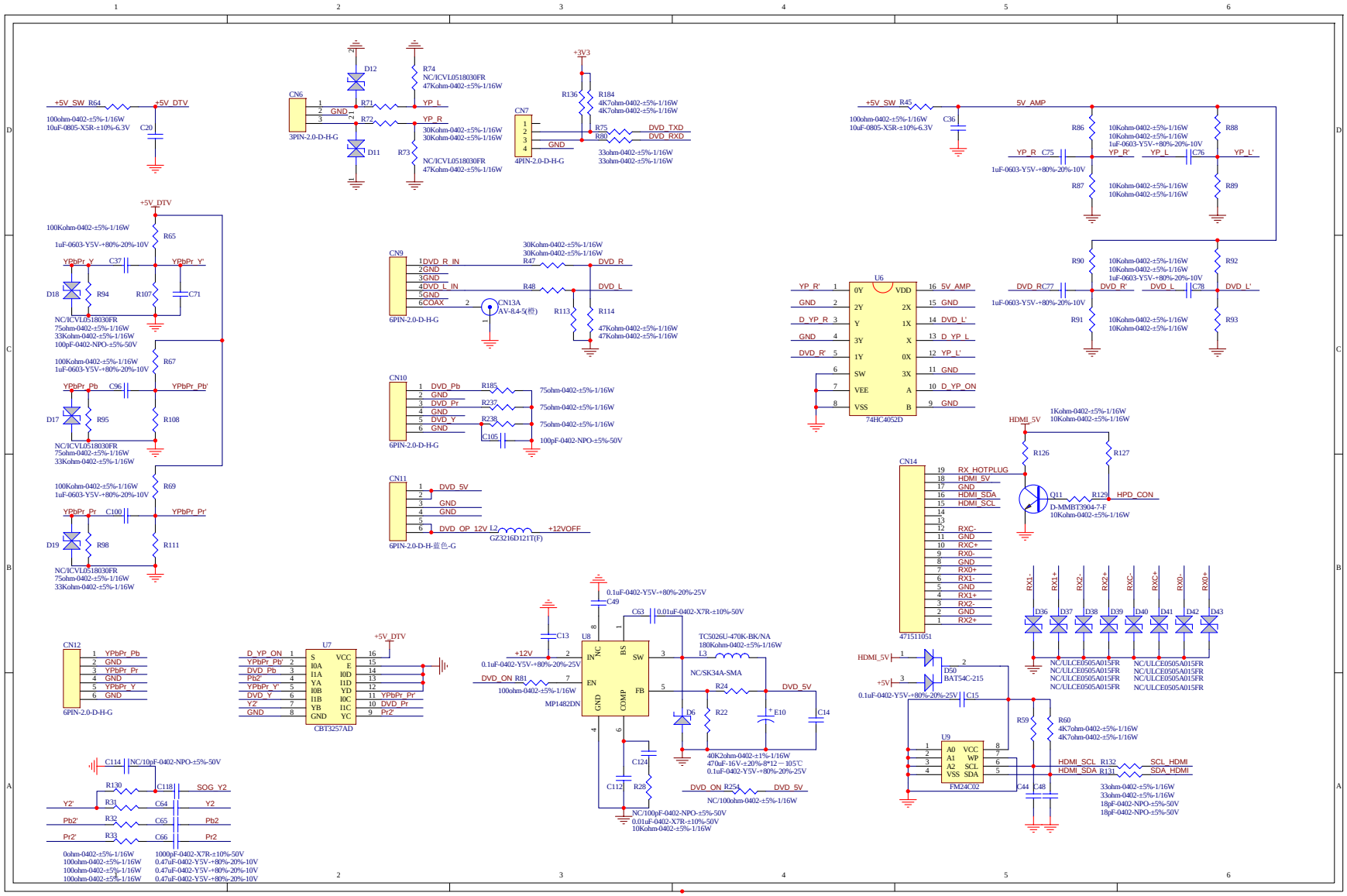
+5V_SW_R64
100ohm-0402-±5%-1/16W
10uF-0805-X5R-±10%-6.3V
C20
+5V_DTV
CN6
3PIN-2.0-D-H-G
D12
D11
R71
R72
R73
R74
NC/ICVL0518030FR
47Kohm-0402-±5%-1/16W
YP_L
YP_R
30Kohm-0402-±5%-1/16W
30Kohm-0402-±5%-1/16W
CN7
4PIN-2.0-D-H-G
+3V3
R136
R184
4K7ohm-0402-±5%-1/16W
4K7ohm-0402-±5%-1/16W
R75
R80
DVD_TXD
DVD_RXD
GND
33ohm-0402-±5%-1/16W
33ohm-0402-±5%-1/16W
+5V_SW_R45
100ohm-0402-±5%-1/16W
10uF-0805-X5R-±10%-6.3V
C36
5V_AMP
R86
R88
10Kohm-0402-±5%-1/16W
10Kohm-0402-±5%-1/16W
1uF-0603-Y5V-+80%-20%-10V
YP_R_C75
YP_R'
YP_L
C76
YP_L'
1uF-0603-Y5V-+80%-20%-10V
R87
R89
10Kohm-0402-±5%-1/16W
10Kohm-0402-±5%-1/16W
+5V_DTV
100Kohm-0402-±5%-1/16W
1uF-0603-Y5V-+80%-20%-10V
R65
YPbPr_Y
C37
YPbPr_Y'
D18
R94
R107
C71
NC/ICVL0518030FR
75ohm-0402-±5%-1/16W
33Kohm-0402-±5%-1/16W
100pF-0402-NPO-±5%-50V
100Kohm-0402-±5%-1/16W
1uF-0603-Y5V-+80%-20%-10V
R67
YPbPr_Pb
C96
YPbPr_Pb'
D17
R95
R108
NC/ICVL0518030FR
75ohm-0402-±5%-1/16W
33Kohm-0402-±5%-1/16W
100Kohm-0402-±5%-1/16W
1uF-0603-Y5V-+80%-20%-10V
R69
YPbPr_Pr
C100
YPbPr_Pr'
D19
R98
R111
NC/ICVL0518030FR
75ohm-0402-±5%-1/16W
33Kohm-0402-±5%-1/16W
CN9
6PIN-2.0-D-H-G
1DVD_R_IN
2GND
3GND
4DVD_L_IN
5GND
6COAX
30Kohm-0402-±5%-1/16W
30Kohm-0402-±5%-1/16W
R47
DVD_R
R48
DVD_L
CN13A
AV-8.4-5(橙)
R113
R114
47Kohm-0402-±5%-1/16W
47Kohm-0402-±5%-1/16W
CN10
6PIN-2.0-D-H-G
DVD_Pb
GND
DVD_Pr
GND
DVD_Y
GND
R185
R237
R238
75ohm-0402-±5%-1/16W
75ohm-0402-±5%-1/16W
75ohm-0402-±5%-1/16W
C105
100pF-0402-NPO-±5%-50V
CN11
6PIN-2.0-D-H-蓝色-G
DVD_5V
GND
GND
DVD_OP_12V
L2
GZ3216D121T(F)
+12VOFF
U6
74HC4052D
YP_R'
GND
D_YP_R
GND
DVD_R'
0Y
2Y
Y
3Y
1Y
SW
VEE
VSS
VDD
2X
1X
X
0X
3X
A
B
5V_AMP
GND
DVD_L'
D_YP_L
YP_L'
GND
D_YP_ON
GND
R90
R92
10Kohm-0402-±5%-1/16W
10Kohm-0402-±5%-1/16W
1uF-0603-Y5V-+80%-20%-10V
DVD_RC77
DVD_R'
DVD_L
C78
DVD_L'
1uF-0603-Y5V-+80%-20%-10V
R91
R93
10Kohm-0402-±5%-1/16W
10Kohm-0402-±5%-1/16W
HDMI_5V
1Kohm-0402-±5%-1/16W
10Kohm-0402-±5%-1/16W
R126
R127
CN14
471511051
RX_HOTPLUG
HDMI_5V
GND
HDMI_SDA
HDMI_SCL
RXC-
GND
RXC+
RX0-
GND
RX0+
RX1-
GND
RX1+
RX2-
GND
RX2+
Q11
R129
HPD_CON
D-MMBT3904-7-F
10Kohm-0402-±5%-1/16W
RX1-
RX1+
RX2-
RX2+
RXC-
RXC+
RX0-
RX0+
D36
D37
D38
D39
D40
D41
D42
D43
NC/ULCE0505A015FR
NC/ULCE0505A015FR
NC/ULCE0505A015FR
NC/ULCE0505A015FR
NC/ULCE0505A015FR
NC/ULCE0505A015FR
NC/ULCE0505A015FR
NC/ULCE0505A015FR
CN12
6PIN-2.0-D-H-G
YPbPr_Pb
GND
YPbPr_Pr
GND
YPbPr_Y
GND
U7
CBT3257AD
+5V_DTV
D_YP_ON
YPbPr_Pb'
DVD_Pb
Pb2'
YPbPr_Y'
DVD_Y
Y2'
GND
S
I0A
I1A
YA
I0B
I1B
YB
GND
VCC
E
I0D
I1D
YD
I0C
I1C
YC
YPbPr_Pr'
DVD_Pr
Pr2'
0.1uF-0402-Y5V-+80%-20%-25V
C49
C63
0.01uF-0402-X7R-±10%-50V
C13
U8
MP1482DN
+12V
0.1uF-0402-Y5V-+80%-20%-25V
DVD_ON
R81
100ohm-0402-±5%-1/16W
IN
NC
BS
SW
EN
FB
GND
COMP
TC5026U-470K-BK/NA
180Kohm-0402-±5%-1/16W
L3
NC/SK34A-SMA
R24
DVD_5V
D6
R22
E10
C14
40K2ohm-0402-±1%-1/16W
470uF-16V-±20%-8*12 — 105℃
0.1uF-0402-Y5V-+80%-20%-25V
C124
C112
R28
NC/100pF-0402-NPO-±5%-50V
0.01uF-0402-X7R-±10%-50V
10Kohm-0402-±5%-1/16W
DVD_ON
R254
DVD_5V
NC/100ohm-0402-±5%-1/16W
HDMI_5V
+5V
D50
BAT54C-215
0.1uF-0402-Y5V-+80%-20%-25V
C15
R59
R60
4K7ohm-0402-±5%-1/16W
4K7ohm-0402-±5%-1/16W
U9
FM24C02
A0
A1
A2
VSS
VCC
WP
SCL
SDA
HDMI_SCL
R132
SCL_HDMI
HDMI_SDA
R131
SDA_HDMI
C44
C48
33ohm-0402-±5%-1/16W
33ohm-0402-±5%-1/16W
18pF-0402-NPO-±5%-50V
18pF-0402-NPO-±5%-50V
C114
NC/10pF-0402-NPO-±5%-50V
R130
C118
SOG_Y2
Y2'
R31
C64
Y2
Pb2'
R32
C65
Pb2
Pr2'
R33
C66
Pr2
0ohm-0402-±5%-1/16W
100ohm-0402-±5%-1/16W
100ohm-0402-±5%-1/16W
100ohm-0402-±5%-1/16W
1000pF-0402-X7R-±10%-50V
0.47uF-0402-Y5V-+80%-20%-10V
0.47uF-0402-Y5V-+80%-20%-10V
0.47uF-0402-Y5V-+80%-20%-10V

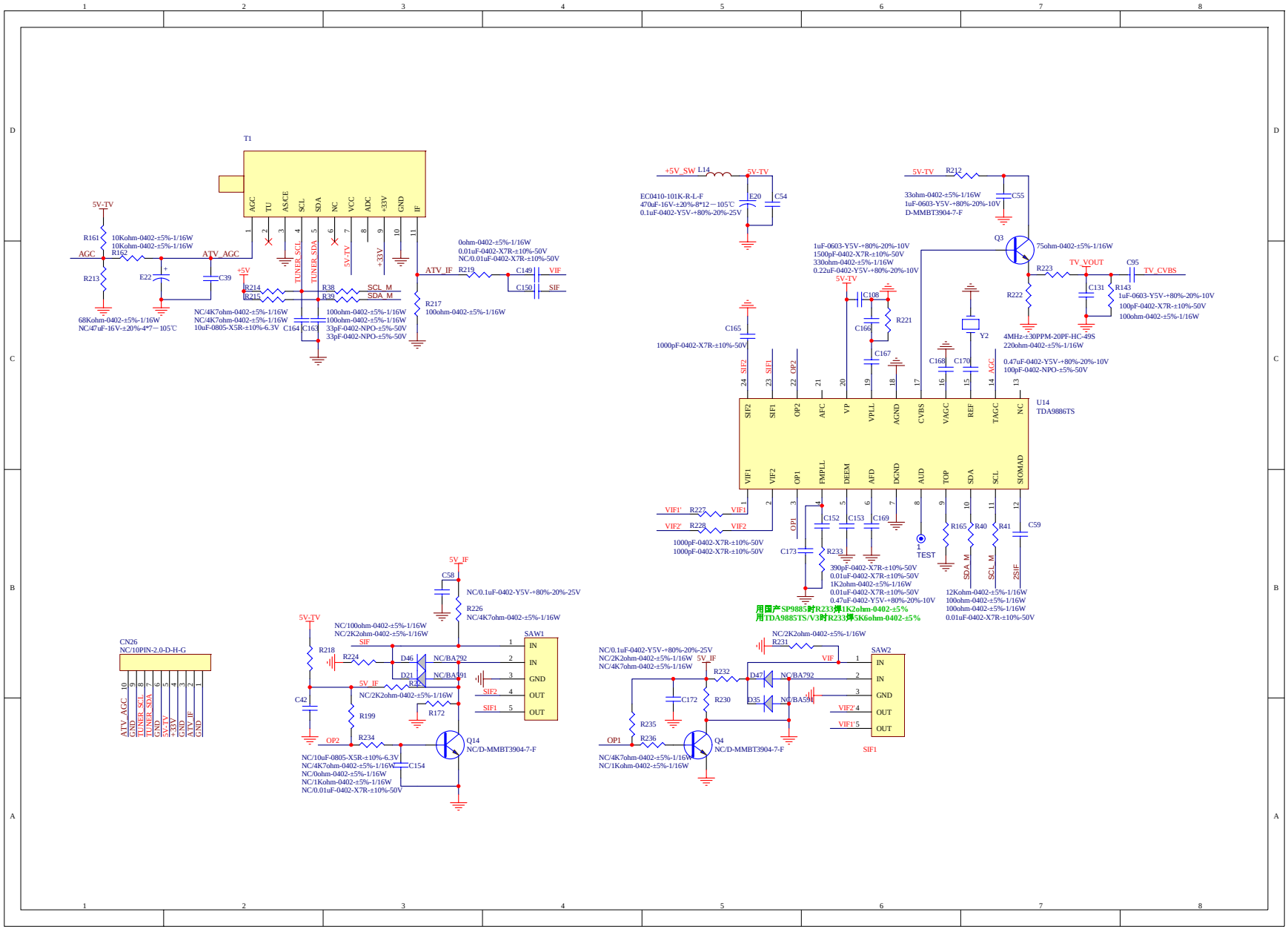
T1
AGC
TU
AS/CE
SCL
SDA
NC
VCC
ADC
+33V
GND
IF
5V-TV
R161
10Kohm-0402-±5%-1/16W
10Kohm-0402-±5%-1/16W
R162
AGC
ATV_AGC
R213
68Kohm-0402-±5%-1/16W
NC/47uF-16V-±20%-4*7－105℃
E22
C39
+5V
R214
R215
NC/4K7ohm-0402-±5%-1/16W
NC/4K7ohm-0402-±5%-1/16W
10uF-0805-X5R-±10%-6.3V
C164
C163
TUNER_SCL
TUNER_SDA
R38
R39
SCL_M
SDA_M
100ohm-0402-±5%-1/16W
100ohm-0402-±5%-1/16W
33pF-0402-NPO-±5%-50V
33pF-0402-NPO-±5%-50V
R217
100ohm-0402-±5%-1/16W
ATV_IF
R219
0ohm-0402-±5%-1/16W
0.01uF-0402-X7R-±10%-50V
NC/0.01uF-0402-X7R-±10%-50V
C149
C150
VIF
SIF
+5V_SW
L14
5V-TV
E20
C54
EC0410-101K-R-L-F
470uF-16V-±20%-8*12－105℃
0.1uF-0402-Y5V-+80%-20%-25V
5V-TV
R212
33ohm-0402-±5%-1/16W
1uF-0603-Y5V-+80%-20%-10V
D-MMBT3904-7-F
C55
Q3
75ohm-0402-±5%-1/16W
R223
TV_VOUT
C95
TV_CVBS
R222
C131
R143
1uF-0603-Y5V-+80%-20%-10V
100pF-0402-X7R-±10%-50V
100ohm-0402-±5%-1/16W
1uF-0603-Y5V-+80%-20%-10V
1500pF-0402-X7R-±10%-50V
330ohm-0402-±5%-1/16W
0.22uF-0402-Y5V-+80%-20%-10V
5V-TV
C108
C166
R221
C167
C165
1000pF-0402-X7R-±10%-50V
Y2
4MHz-±30PPM-20PF-HC-49S
220ohm-0402-±5%-1/16W
C168
C170
0.47uF-0402-Y5V-+80%-20%-10V
100pF-0402-NPO-±5%-50V
AGC
U14
TDA9886TS
SIF2
SIF1
OP2
AFC
VP
VPLL
AGND
CVBS
VAGC
REF
TAGC
NC
VIF1
VIF2
OP1
FMPLL
DEEM
AFD
DGND
AUD
TOP
SDA
SCL
SIOMAD
VIF1'
R227
VIF1
VIF2'
R228
VIF2
1000pF-0402-X7R-±10%-50V
1000pF-0402-X7R-±10%-50V
C152
C153
C169
C173
R233
390pF-0402-X7R-±10%-50V
0.01uF-0402-X7R-±10%-50V
1K2ohm-0402-±5%-1/16W
0.01uF-0402-X7R-±10%-50V
0.47uF-0402-Y5V-+80%-20%-10V
TEST
R165
R40
R41
C59
SDA_M
SCL_M
2SIF
12Kohm-0402-±5%-1/16W
100ohm-0402-±5%-1/16W
100ohm-0402-±5%-1/16W
0.01uF-0402-X7R-±10%-50V
用国产SP9885时R233焊1K2ohm-0402-±5%
用TDA9885TS/V3时R233焊5K6ohm-0402-±5%
CN26
NC/10PIN-2.0-D-H-G
ATV_AGC
GND
TUNER_SCL
TUNER_SDA
GND
5V-TV
GND
GND
ATV_IF
GND
5V_IF
C58
NC/0.1uF-0402-Y5V-+80%-20%-25V
R226
NC/4K7ohm-0402-±5%-1/16W
5V-TV
NC/100ohm-0402-±5%-1/16W
NC/2K2ohm-0402-±5%-1/16W
SIF
R218
R224
D46
NC/BA792
D21
NC/BA591
R225
5V_IF
NC/2K2ohm-0402-±5%-1/16W
C42
R199
R172
OP2
R234
Q14
NC/D-MMBT3904-7-F
NC/10uF-0805-X5R-±10%-6.3V
NC/4K7ohm-0402-±5%-1/16W
NC/0ohm-0402-±5%-1/16W
NC/1Kohm-0402-±5%-1/16W
NC/0.01uF-0402-X7R-±10%-50V
C154
SAW1
IN
IN
GND
OUT
OUT
SIF2
SIF1
NC/0.1uF-0402-Y5V-+80%-20%-25V
NC/2K2ohm-0402-±5%-1/16W
NC/4K7ohm-0402-±5%-1/16W
5V_IF
R231
NC/2K2ohm-0402-±5%-1/16W
VIF
R232
D47
NC/BA792
D35
NC/BA591
C172
R230
R235
OP1
R236
Q4
NC/D-MMBT3904-7-F
NC/4K7ohm-0402-±5%-1/16W
NC/1Kohm-0402-±5%-1/16W
SAW2
IN
IN
GND
OUT
OUT
VIF2'
VIF1'
SIF1

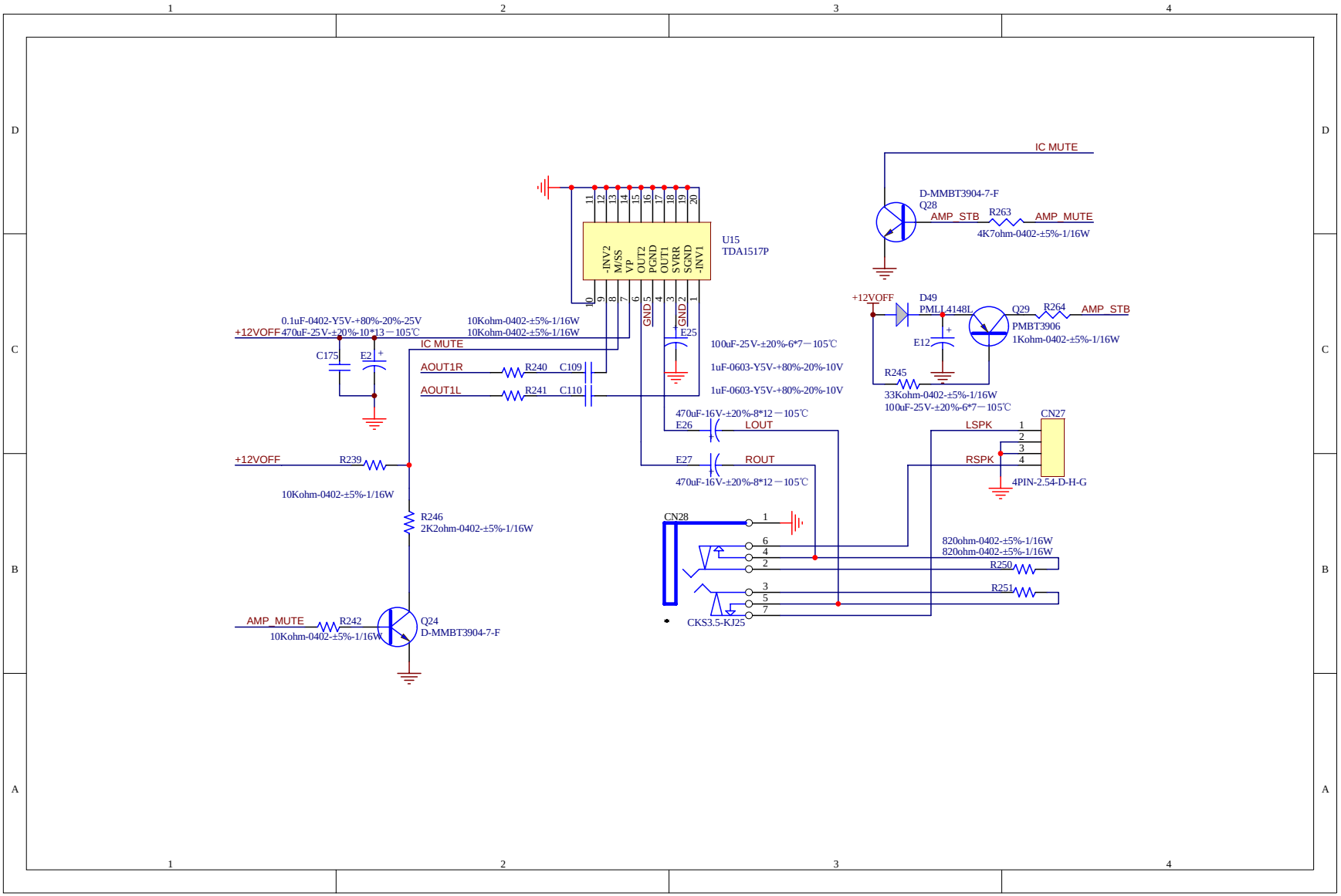
U15
TDA1517P
-INV2
M/S5
VP
OUT2
PGND
OUT1
SVRR
SGND
-INV1
GND 5
GND 2
IC MUTE
D-MMBT3904-7-F
Q28
AMP_STB
R263
AMP_MUTE
4K7ohm-0402-±5%-1/16W
+12VOFF
D49
PMLL4148L
Q29
R264
AMP_STB
PMBT3906
1Kohm-0402-±5%-1/16W
E12
R245
33Kohm-0402-±5%-1/16W
100uF-25V-±20%-6*7－105℃
0.1uF-0402-Y5V-+80%-20%-25V
+12VOFF
470uF-25V-±20%-10*13－105℃
C175
E2
10Kohm-0402-±5%-1/16W
10Kohm-0402-±5%-1/16W
E25
100uF-25V-±20%-6*7－105℃
1uF-0603-Y5V-+80%-20%-10V
1uF-0603-Y5V-+80%-20%-10V
AOUT1R
R240
C109
AOUT1L
R241
C110
470uF-16V-±20%-8*12－105℃
E26
LOUT
E27
ROUT
470uF-16V-±20%-8*12－105℃
CN27
LSPK
RSPK
4PIN-2.54-D-H-G
+12VOFF
R239
10Kohm-0402-±5%-1/16W
R246
2K2ohm-0402-±5%-1/16W
CN28
CKS3.5-KJ25
820ohm-0402-±5%-1/16W
820ohm-0402-±5%-1/16W
R250
R251
AMP_MUTE
R242
10Kohm-0402-±5%-1/16W
Q24
D-MMBT3904-7-F